▶ **400SD** Plunger Lock

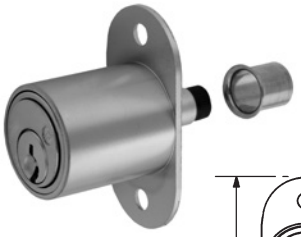

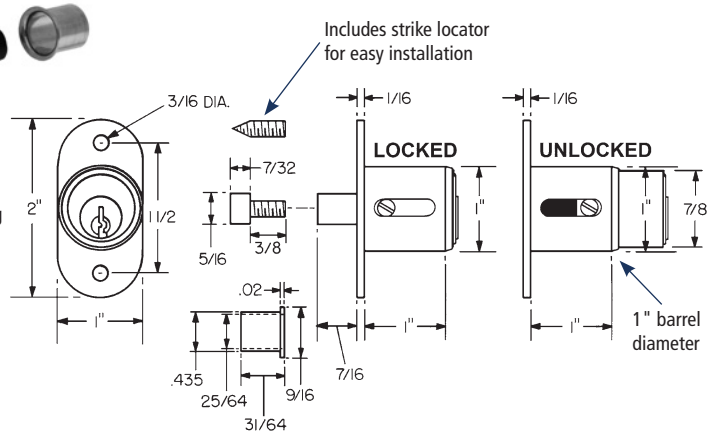

Max. bolt projection using optional threaded bolt extender is 27/32"

Item	Finish	Cyl. Length	Keying
400SD	26D, US3, 10B	1"	KD, KA 4T21579, 4T37526 Custom Keyed

SPECIFICATIONS

Keying: Can be keyed together with other R Series locks
Rekeyable: Easily rekeyable via speed-release cylinder release mechanism
US Patent Nos: 4,920,774; 5,121,619
Standard function: Key removable in locked or unlocked position.
Body: Zinc die cast
Cylinder: Solid brass, pin tumbler
Cylinder length: 1"
Barrel diameter: 1"
Finish: 26D, US3 or 10B
Packaged: Packed 10 per box

KEYING INFORMATION

Keyway: R Series (equivalent to CCL R1 system)
Keys: Includes 2 keys per lock
Stock keying: KD/KA - 5 pin standard
Stock KA#: 4T21579, 4T37526
Masterkeyed: 5 pin standard
Grand masterkeyed: Available
Keyblank 5-pin: KBR-5-NP (equivalent to CO106, 1003A)

INCLUDED ACCESSORIES

34-9 matching thimble strike
10-24 machine thread bolt extender for varying gaps between bypassing doors
10-24 machine thread strike locator

▶ **429R** Showcase/Ratchet Lock

Item	Finish	Keying
429R	26D	KD, KA 4T21579, 4T37526 Custom Keyed

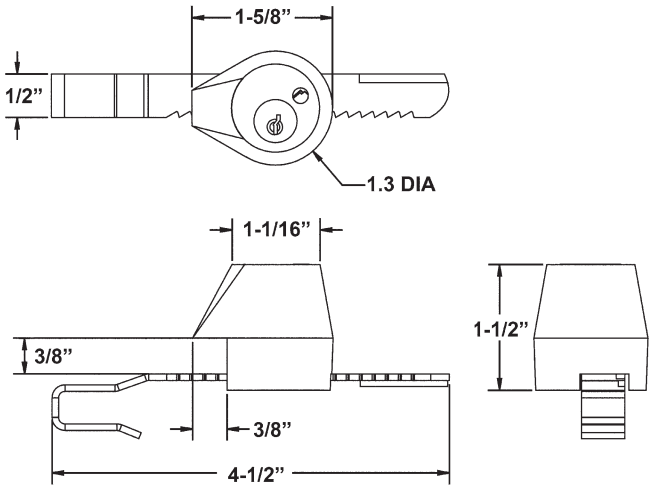

SPECIFICATIONS

Keying: Can be keyed together with other R Series locks
Rekeyable: Easily rekeyable via speed-release cylinder release mechanism
US Patent No: 5,121,619
Body: Zinc die cast
Cylinder: Solid brass, pin tumbler
Strap: Nylon coated strap fits 1/4" material
Finish: 26D
Packaged: Packed 10 per box

KEYING INFORMATION

Keyway: R Series (equivalent to CCL R1 system)
Stock keying: KD/KA - 5 pin standard
Stock KA#: 4T21579, 4T37526
Masterkeyed: 5 pin standard
Grand masterkeyed: Available
Keyblank 5-pin: KBR-5-NP (equivalent to CO106, 1003A)

INCLUDED ACCESSORIES

Strap for 1/4" material thickness

The following warning is applicable to all parts listed on this page:
WARNING: This product can expose you to chemicals including chromium, which is known to the State of California to cause cancer and birth defects or other reproductive harm. for more information go to www.P65Warnings.ca.gov.

Tel: 206.362.3290 | 800.525.0954
Fax 206.362.3569 | www.olympuslock.com