OLYMPUS® LOCK INC

CATALOG

Institutional Grade Cabinet Locks, Padlocks and Accessories

2025













See our line of ANSI/BHMA grade 1 / 2 products.

www.olympuslock.com
800-525-0954 | 206-362-3290

Olympus Lock, Inc.









education | healthcare | casinos | airports | museums | prisons | banking | retail | laboratory | lockers | stadiums

EXPERIENCE

Olympus Lock has been a trusted leader in lock design and manufacturing for over 30 years, specializing in easily rekeyable pin tumbler, combination, interchangeable core, and engineered cabinet lock bodies for third party cylinders. We offer a wide selection of keyways and cabinet lock solutions for commercial and institutional facilities. Our design philosophy focuses on creating durable, high-performance locks that enhance operational efficiency and simplify maintenance.

APPLICATIONS

Olympus cabinet locks are used in a variety of cabinet and casework applications, including: K-12 public schools, colleges and universities, correctional facilities, medical offices, hospitals, casinos, retail cash drawers, lockers, kiosks, retail showcases, airline ticket counters, museums, hotels and motels, amusement parks, theaters, restaurants, country clubs, libraries, airports, police stations, fire stations, and churches.

PIN TUMBLER SOLUTIONS

Olympus Lock specializes in pin-tumbler cabinet locks designed for institutional and retail applications. Ideal for facilities requiring large-scale lock installations, such as schools, banks, and hospitals, pin tumbler locks offer superior security and support complex master and sub-master keying systems. We provide a variety of cabinet lock solutions that balance cost-effectiveness with high security. Beyond that, our locks can be keyed to match your existing door hardware, simplifying access with a convenient "one-key" system.

INNOVATION

We hold numerous U.S. and Canadian patents, proving our commitment to provide innovative solutions for your cabinet lock needs. At Olympus, our goal has always been to create locks that are easy to install, operate, and maintain. Each product is meticulously designed, engineered, and manufactured to precise standards. Additionally, we provide an extensive range of accessories to ensure smooth installation, use, and servicing of our locks.

SERVICE

Our delivery is the fastest in the industry. We have a vast inventory of off-the-shelf masterkeyed locks and can ship most custom keyed orders within 1-5 business days.

ELECTRONIC KEY RECORDS

We manage and save all our custom keying records for future reference. Need to add locks to an existing project? No problem. We have your records readily available, making it easy to order additional locks across different job phases. We handle the records so you don't have to.

SPECIFICATIONS

We provide detailed, pre-written architectural specifications for each of our locks. Specifications can be obtained directly from our website at **olympuslock.com**.

CONTACT

Visit our website at **olympuslock.com** or call us toll-free at **800-525-0954**, or email us at **info@olympuslock.com** for more information. Subscribe online to our eNews list to receive new product announcements and technical bulletins.

ARCHITECTURAL FINISH CHART

Olympus Lock offers locks in the most popular architectural finishes. Not all finishes are available on all products. See catalog page for standard finishes available on a specific item.

US CODE	BHMA	DESCRIPTION
US26D	626	Dull chrome
US4	606	Satin brass
US3	605	Bright brass
US26	625	Bright chrome
US32D	630	Satin stainless steel
US10B	613	Oil rubbed bronze
US19	622	Flat black coated
	14A	Polished nickel


US26D / 626
Satin Chrome Plated


US4 / 606
Satin Brass


US3 / 605
Polished Brass


US26 / 625
Polished Chrome


US10B / 613
Oil Rubbed Bronze


US19 / 622
Flat Black


14A
Polished Nickel

Tel: 206.362.3290 | 800.525.0954
Fax 206.362.3569 | www.olympuslock.com

OLYMPUS LOCK INC

Institutional grade cabinet locks

— Heavy duty locks for high use applications —

BENEFITS OF PIN TUMBLER

Pin tumbler key systems provide significantly more key changes than disc tumbler systems. See the chart below for the typical number of allowable key changes under a single master key:

Wafer/disc .....80 key changes
4 pin tumbler.....650 key changes
5 pin tumbler.....2,000 key changes
6 pin tumbler.....4,000 key changes
7 pin tumbler.....16,000 key changes

ANSI/BHMA STANDARDS

We offer a selection of cabinet locks that have passed ANSI/BHMA Grade 1 or Grade 2 testing requirements and are compatible for use when ANSI/BHMA locks are specified.

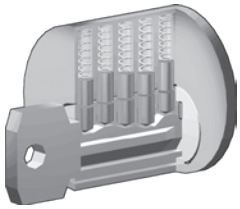

PIN TUMBLER

- *5 or 6 chambers, pin #s 0-9 (10 total steps per chamber)*
- *2000+ keyed different and master keyed total key changes*
- *Can be grand master keyed*
- *More secure keyway*
- *For high-use commercial applications*

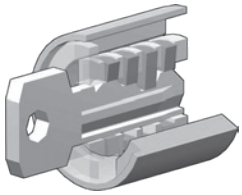

DISC TUMBLER

- *5 or 6 chambers disc #s 0-2 (3 total steps per chamber)*
- *80 keyed different and master keyed total key changes*
- *Cannot be grand master keyed*
- *Less secure keyway*
- *Typical usage is in furniture or when a less expensive lock is desired*

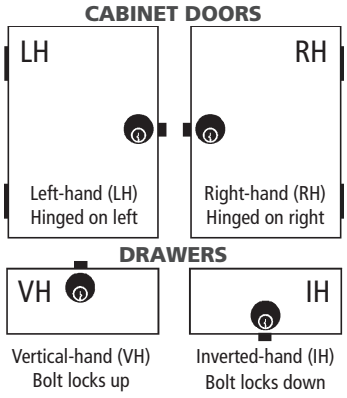

STANDARD FUNCTION

Key removable in the locked or unlocked position. Locks ship with standard function unless key retaining is specified at time of order.

KEY RETAINING

The key cannot be removed from the lock while in the "unlocked" position. Key-retaining function is generally used in instances where cabinets or drawers should not be left unlocked.

HANDING

Handed locks must be ordered either LH, RH, VH, or IH (see figure at left).

Non-handed locks can be ordered as either door or drawer. Door locks will work in both LH or RH applications and drawer locks will work for both vertical or inverted function.

CUSTOMERS AND PROJECTS

EDUCATION
University of Connecticut
Ohio State University
University of Southern Alabama
University of Washington
University of South Carolina
Anchorage School District
Downey Unified School District
Palm Desert High School
San Antonio Independent SD
Plano Independent School District
And many more...

PRISONS/JAILS
California State Prison
Washington State Penitentiary
Avenal State Prison
Fox Lake Correctional
San Quentin State Prison
Countryside Court House
Folsom Prisons
Northern Branch Jail Santa Barbara
Crook City Public Safety
Pleasant Valley State Prison
And many more…

HEALTHCARE
Mayo Clinic
Dignity Health
Veterans Affairs Medical Centers
UT Southwest Radiation Oncology
Scripps Green Hospital
Adventist Medical Center
St. Luke's Magic Valley
Pacific Source Health
St. John's Regional Health
St. Vincent Hospital
And many more...

BANKING
Bank of America
Banner Bank
Navy Federal Credit Union
The Federal Reserve Bank
Hawaii State Federal Credit Union
First United Bank
Cottonwood Credit Union
Chase Bank
Wells Fargo
Choice Bank
And many more...

CASINOS
Bellagio
Mirage
Mandalay Bay
Wynn & Wynn Encore
Venetian
Seven Feathers Casino
Wynn Boston Harbor
Artichoke Joe's Casino
Atlantis Hotel & Casino
The Venetian Macau
And many more...

LABORATORY
UT Southwestern Medical Center
Kootenai Health Imaging
General Motors Technical Center
Memorial Sloan Kettering
CVWD Water Quality Lab
South Sound Behavioral Health
Cybercore Integration Center
St. Mary's Hospital
Oregon State Police Forensic Lab
Teleflex
And many more…

AIRPORTS/AIRLINES
Alaska Airlines
United Airlines
Southwest Airlines
Miami International Airport
Virgin America Airlines
International Falls Airport
Sea-Tac International Airport
Miami International Airport
Hawaiian Airlines
Virgin America
And many more...

LOCKERS
Mesquite School District
24 Hour Fitness
Vancouver Police Department
YMCA & Aquatic Center
Carlton College
Selah Aquatic Center
Bainbridge Island Fire Station
Central Valley Fire Station
UCONN Student Rec Center
LA Fitness
And many more...

MUSEUMS/PARKS
Walt Disney World
Disneyland Anaheim
Seaworld
Nascar
Shanghai Disneyland Resort
Anaheim Aquatic Center
Lafayette Science Museum
Denver Art Museum
Exploratorium San Francisco
Seattle Art Museum
And many more...

STADIUMS
Bolsa Grande High School Stadium
University of Southern Indiana Arena
Lake Forest Civic Center
Phillips Arena
Staples Center
And many more...

RETAIL
Costco
Big Lots
Target
Kroger Grocery Stores
Ulta Cosmetics
CVS Pharmacy
Family Dollar
Michael's
And many more...

OLYMPUS® LOCK INC
Tel: 206.362.3290 | 800.525.0954
Fax 206.362.3569 | www.olympuslock.com

The following warning is applicable to all parts listed on this page:
WARNING: This product can expose you to chemicals including chromium, which is known to the State of California to cause cancer and birth defects or other reproductive harm. for more information go to www.P65Warnings.ca.gov.

Product Groups



▶ COMBI-CAM™
Resettable combination cam and locker locks. Fits in standard 3/4" diameter hole prep common to most cam locks. Provides for keyless operation. **(Pages 8-11)**



▶ PADLOCKABLE CAM LOCK
This unique cam lock is typically used in locker applications where the end-user will supply the padlock. We offer a variety of additional cam styles and lengths. Our DCP500 includes an integrated cabinet pull. **(Pages 12-13)**



▶ CASCADE SERIES®
Disc tumbler cam and deadbolt locks. Fits in standard 3/4" diameter hole prep common to most cam locks. Will key into existing CompX disc tumbler systems. Packaged with cylinder/barrel assembled for easy installation. **(Page 15-16)**



▶ CCL SERIES
Disc tumbler deadbolt locks. Packaged with barrel assembled for easy installation. **(Page 17)**



▶ N SERIES
A value-priced alternative to commercial keyway locks, N Series locks use the National D4291 (4 pin) or D4292 (5 pin) key system. A variety of lock types are available including door and drawer deadbolt and latch locks, cam locks, sliding door plunger locks, ratchet locks and file cabinet locks. **(Pages 18-26, 68)**



▶ R SERIES
A value-priced alternative to commercial keyway locks, these locks use the CCL R1 (5 pin) key system. A variety of lock types are available including door and drawer deadbolt and latch locks, cam locks, sliding door plunger locks and ratchet locks. **(Pages 27-32)**



▶ SCHLAGE C KEYWAY
This product family offers locks utilizing the Schlage C keyway—one of Schlage's most popular keyways. Choose from door and drawer deadbolt and latch locks, cam lock, or ratchet lock. All locks are easily rekeyable. **(Pages 34-39)**



▶ LESS CYLINDER (Schlage Compatible)
This product family includes the same locks as our Schlage C keyway but without cylinders. You can install a variety of popular third-party (Schlage compatible or Medeco) cylinders so your cabinet locks can match the same key system as the rest of the facility. **(Pages 35-39)**



▶ LESS CYLINDER (Sargent Original)
We offer door and drawer deadbolt lock bodies made specifically to chamber Sargent original cylinders. Key your cabinet locks into your existing Sargent system with ease. **(Page 33)**



▶ ENCLOSURE LOCKS
These locks are used most commonly in metal traffic enclosure cabinets for municipalities. We have available the common KA#2 or an SFIC version for which we also supply Green, Red, Blue, White or Orange cores. **(Pages 50-52)**



▶ RIM CYLINDER CONVERSION KIT
Electronic rim cylinder conversion kit allows you to convert a SALTO US rim cylinder and other third party US rim cylinders into a latch or deadbolt cabinet lock. **(Page 49)**



▶ SARGENT IC CORE
Olympus is the only company that manufactures cabinet locks for Sargent interchangeable core. Add one-key convenience to your existing Sargent interchangeable core system by having your cabinets keyed to match your existing Sargent IC system. **(Page 48)**



▶ SCHLAGE FULL-SIZE IC CORE
Olympus offers a range of cabinet lock options that will accept Schlage full-size (or compatible) interchangeable cores. Locks include door and drawer deadbolt locks, cam lock, latch lock, and ratchet lock. **(Pages 40-43)**



▶ CORBIN/RUSSWIN IC CORE
Olympus is the only company that manufactures cabinet locks for Corbin/Russwin interchangeable core. Locks are available door and drawer deadbolt, drawer latch, and cam lock. **(Pages 44-45)**



▶ MEDECO/YALE IC CORE
Looking for a cabinet lock to accept a Medeco or Yale large format interchangeable core? We have them. Locks are available door and drawer deadbolt and cam lock. **(Pages 46-47)**



▶ SMALL FORMAT IC CORE
(Best Compatible) Olympus offers a wide selection of small format (BEST style) interchangeable core locks including direct retrofits for Best original cabinet locks. Available styles include door and drawer deadbolt and latch locks, cam locks, sliding door plunger locks, through-glass locks, ratchet locks, and mailbox locks. **(Pages 52-64)**



▶ BEST KEYWAY 3/4" CAM LOCK
This is a non-IC core cam lock available with a Best A, B, E, F, G, J, K, L or R keyway. It fits in a standard 3/4" hole and includes our patented cam shifting mechanism for maximum flexibility. **(Page 65)**



▶ BRASS PADLOCKS
BP Series all weather indoor/outdoor brass padlocks are available either keyed alike or keyed different in a variety of sizes and shackle lengths. The CRB Series padlocks accept a Corbin/Russwin interchangeable core cylinder. **(Page 67-68)**

The following warning is applicable to all parts listed on this page:
WARNING: This product can expose you to chemicals including chromium, which is known to the State of California to cause cancer and birth defects or other reproductive harm. for more information go to www.P65Warnings.ca.gov.

Tel: 206.362.3290 | 800.525.0954
Fax 206.362.3569 | www.olympuslock.com

OLYMPUS® LOCK INC

Table of Contents

COMBI-CAM
7850 8
7803 9
7440 10
7445 11
7440/7445 Optional Cams 82

PADLOCKABLE CAM LOCK
DCP 12
DCP500 13
Bumper Plates 13
Optional Cams 12

CASCADE SERIES
Keying Information 14
951,952,953,954,955,960,961 (Grade 2) 15
973,974,975 16
Keys & Keying Kit 15
Optional Cams 15

CCL SERIES
266,267 17

N SERIES
Keying Information 14
100DR / 100B / 100M ..... (Grade 1) 18
200DW / 200B / 200M ..... (Grade 1) 19
300SD 21
329R 21
L20V 22
998 / 999 23
DCN1,2,3,4 ..... (Grade 1) 20
FC10 / FC26-AR 25
N078 26
T37 24
PN50 68
T54C 25

R SERIES
Keying Information 14
500DR / 500B / 500M ..... (Grade 1) 27
600DW / 600B / 600M ..... (Grade 1) 28
400SD 30
429R 30
996 / 997 32
DCR1,2,3,4 ..... (Grade 1) 29
R078 31

SCHLAGE C KEYWAY (KIK)
Keying Information 14
700S / 800S ..... (Grade 1) 34
820S 36
829R ..... (Grade 1) 37
850S 39
L78 38

SCHLAGE STYLE (Less Cylinder KIK)
700LC / 800LC ..... (Grade 1) 35
820LC 36
829R-LC ..... (Grade 1) 37
850LC 39
L78LC 38
KABA Conversion Kit 35

SARGENT STYLE (Less Cylinder KIK)
754LC 33
854LC 33

RIM CYLINDER CONVERSION KIT
SLT-01 49
SLT-02 49

ENCLOSURE LOCKS
P3L 50
E5D / E5L 51
725RSL 52

BEST KEYWAY
B7 65

INTERCHANGEABLE CORE
CORBIN/RUSSWIN
CR1125RD 44
CR1125RL 44
CR25 45

MEDECO/YALE
931DR 46
931DW 46
ME93 (Medeco) 47
YA93 (Yale) 47

SMALL FORMAT *(Best Compatible)*
L72V 64
720 ..... (Grade 1) 53
720B-DM 54
721DR ..... (Grade 1) 55
721DW ..... (Grade 1) 56
722 57
723 57
724VR 58
725RD ..... (Grade 1) 59
725RL ..... (Grade 1) 60
725RSL 52
725MD ..... (Grade 1) 61
725ML ..... (Grade 1) 62
728MBL 58
729R ..... (Grade 1) 63
950 64

SARGENT
SA54 48

SCHLAGE FULL-SIZE
777 / 888 ..... (Grade 1) 40
920 ..... (Grade 1) 41
929R ..... (Grade 1) 42
L92V 43

PADLOCKS
BP (Mountain) Series 67
CRB200 (Corbin/Russwin IC Core) 67
PN50 (N Series Keyway) 68

CYLINDERS
Keying Information 14
206 / 207 SFIC (Best Compatible) 69
Plastic Thumbturns 70
Schlage C Keyway 70

KEYS / KEYING / KEYING KITS
Keying Information 14
Keys (Pin Tumbler) 71
Pins & Pinning Kits (Pin Tumbler) 72
Keys (Cascade Disc Tumbler) 15
Keying Kit (Cascade Disc Tumbler) 15

CABINET HARDWARE
102 Series Oval Pull 74
EC Elbow Catch 74
SB Slide Bolt 74

INSTALLATION TOOLS
CL-HIT-25 Drill Guide 75
CL-MP-118 Double-D Punch 75
EC-TEM Elbow Catch Template 74

DISPLAY BOARDS & SALES KITS
Display Boards 73
SK Series Kits 66

PARTS & ACCESSORIES
DCP Accessories 12-13
ETS Through-Bolt Plates 77-78
Internal Spacers/Shims 75-76
Strikes 79-81
Trim Rings TR1256/TR78 74

FOR DCN/DCR/B7 CAM LOCKS
Finger Pull 84
Key Retaining Cam Shifters 84
Optional Cams 83-84
Washers 84

FOR 1-1/8" DIAMETER CAM LOCKS
Cam Assembly Instructions 86
Optional Cams 85
SW-1 Switch Kit 85
TR200 Spacer Collars 85

REFERENCE
Finish Chart 2
Handing / Key-Retaining Chart 3
Keying Information 14
Product Groups 4
Rekeying Instructions 87
Replacement Guide 7

TERMS & CONDITIONS
Cancellation Policy 6
Freight Policy 6
Minimum Orders 6
Returned Goods 6
General Terms & Conditions 6
Warranty 6
California Proposition 65 Statement 6

The following warning is applicable to all parts listed on this page:
WARNING: This product can expose you to chemicals including chromium, which is known to the State of California to cause cancer and birth defects or other reproductive harm. for more information go to www.P65Warnings.ca.gov.

Conditions of Sale

CONDITIONS OF SALE

Payment Terms: 2% 10 days, net 30 days. All payment terms are subject to credit approval. Past due balances are subject to a late payment charge of 1.5% per month, or the maximum permitted by applicable law, whichever is less.
Remittance Address: All payments should be sent by mail to: Olympus Lock, Inc., PO Box 1277, Lynnwood, WA 98046
Minimum Order: $40 net excluding freight. Orders of less than $40 will be subject to a $10 under minimum surcharge or the difference between the order value and $40 whichever is less.
Minimum Annual Purchases: $10,000 net excluding freight for open account status.
Prices: Olympus Lock, Inc. reserves the right to change prices and add or remove items at any time and without prior notice.
Conditions: All specifications are subject to withdrawal or change at any time and without prior notice. Olympus Lock reserves the right to refuse orders which may be submitted. All prices F.O.B. Lynnwood, Washington, US Funds.

OFFICE HOURS & CONTACT INFORMATION

Office Hours: 7:00 AM to 4:00 PM Pacific Standard Time
Phone: 206-362-3290, **Toll-Free:** 800-525-0954, **Fax:** 206-362-3569
Street Address: 18424 Highway 99, Lynnwood, WA 98037
Website: www.olympuslock.com
Company email: info@olympuslock.com

U.S. SHIPMENTS

All merchandise is shipped F.O.B. from our Lynnwood, Washington warehouse and becomes the property of the customer when accepted by the carrier. Olympus Lock will pay freight charges on orders of **$1,500.00** net or more to a single destination within the continental U.S.A. (excluding Alaska) via the carrier of our choice. For Hawaii and Alaska Customers: Olympus will pay freight on shipments of **$1,500** net or more to closest U.S. West Coast port.

CANADIAN SHIPMENTS

All merchandise is shipped F.O.B. our Lynnwood, Washington warehouse and becomes the property of the customer when accepted by the carrier. Olympus Lock will pay freight charges on Canadian orders of **$1,500** net or more to closest U.S.A. border crossing via the carrier of our choice provided this information is clearly specified at time of order. Olympus Lock will pay freight charges on Canadian orders of **$2,000** net or more to a single Canadian destination via the carrier of our choice. All duty and/or customs charges are the sole responsibility of the customer.

DELIVERY

Claims resulting from loss, shortages or damage-in-transit must be reported to Olympus Lock within 15 days of delivery. Any claims resulting from shortages, overages, or the shipment of incorrect products by Olympus Lock must be reported to Olympus Lock within 15 days of delivery. Olympus Lock does not assume responsibility for any damages resulting from any delays in delivery.

REFUSED OR RETURNED SHIPMENTS

The following charges will be assessed against all refused and/or returned shipments which have not been preauthorized or which are found not the fault of Olympus Lock.

1. Customer will be billed for any return shipping fees, duty and taxes.
2. If customer wants Olympus Lock to re-ship the order, a new shipping fee will be assessed and billed at the current shipping rate.
3. All returned and/or reshipped orders are subject to a $20.00 handling fee.
4. For authorized returns, see our Returned Goods Policy.

CANCELLATIONS

Cancellations or alterations to orders will be accepted only when the cancellation or alteration can be made without loss to Olympus Lock. Orders for non-stock and/or custom items may not be canceled after work has begun.

RETURNED GOODS POLICY

No material is to be returned without our verbal or written permission in advance. All returned goods require a Returned Goods Authorization (RGA) number to be obtained from Olympus Lock prior to returning the goods. Only products purchased within the last 12 months may be returned. Any products purchased more than 12 months prior are ineligible for return. Whether goods may be returned will be at the sole discretion of Olympus Lock, Inc. Merchandise returned must be identified as to original purchase order number, date of purchase, and shipper's name and address.

A 25% restocking fee will apply to all returned goods which are found not to be the responsibility of Olympus Lock.

All goods must be shipped freight prepaid and received at our warehouse within 30 days of receiving an RGA number. Goods not received within 30 days of RGA issuance or for which an RGA number was not issued will not be returned and no credit will be issued.

Returned goods must be received in first-class resalable condition and in original factory packaging. The determination of "first-class resalable condition" will be at the sole discretion of Olympus Lock. Goods that are returned and determined by Olympus Lock not to be in first-class resalable condition will not be returned, will be scrapped at the factory, and no credit will be issued.

The following are non-returnable:

1. Custom keyed, non-stock items
2. Goods that have been installed
3. Goods that required custom stamping
4. Goods with custom, special order finishes
5. Products or parts that have been modified
6. Obsolete or discontinued items

LIMITED WARRANTY

Olympus Lock warrants that its products are free from defects in workmanship and materials under normal installation, use and service. This warranty does not cover defects or damages arising from improper installation, improper maintenance, ordinary wear and tear, misuse or abuse.

The only liability of the company in tort or in contract, whether under this warranty or otherwise shall be limited to repair or replacement of products which are returned prepaid to us within one year of the date of original purchase.

This is a limited warranty and is in lieu of all other representations and expressed or implied warranties. Under no circumstances shall Olympus Lock be made liable for any incidental or consequential damages or losses.

WARNING: CALIFORNIA PROPOSITION 65 STATEMENT

This product can expose you to chemicals including lead, which is known to the State of California to cause cancer and birth defects or other reproductive harm. For more information go to www.P65Warnings.ca.gov.

What is California Proposition 65?

Also known as the Safe Drinking Water and Toxic Enforcement Act of 1986, California Proposition 65 is a law that requires warning to consumers if a product exposes consumers to a wide variety of chemicals known by the State of California to cause cancer, birth defects and/or other reproductive harm. Proposition 65 applies only in California.

What does the Proposition 65 warning mean?

A Proposition 65 warning means that the business issuing the warning knows that one or more listed chemicals is merely present in its product. A warning must be given unless a business demonstrates that the exposure it causes poses "no significant risk."

Why does Olympus Lock place a Proposition 65 warning on its products?

A Proposition 65 warning means one of two things: (1) the company evaluated the exposure and has concluded that product exceeds the "no significant risk level"; or (2) the company has chosen to provide a warning simply based on its knowledge about the presence of a listed chemical without attempting to evaluate the exposure.

Out of an abundance of caution, Olympus Lock has elected to place the Proposition 65 warning on all products shipped to California.

The following warning is applicable to all parts listed on this page:
WARNING: This product can expose you to chemicals including chromium, which is known to the State of California to cause cancer and birth defects or other reproductive harm. for more information go to www.P65Warnings.ca.gov.

Replacement Guide

Information given is for dimensional and keyway replacement only. Olympus Lock cabinet locks differ from other manufacturer's locks because they are easily rekeyable in five minutes or less with readily available tools.

CompX/National Cabinet Lock			Olympus Lock N Series		
C8102	Cam Lock	1-1/16"	**DCN1**	Cam Lock	1-1/16"
C8103	Cam Lock	1-3/16"	**DCN2**	Cam Lock	1-3/16"
C8106	Cam Lock	1-7/16"	**DCN3**	Cam Lock	1-7/16"
C8108 C8109	Cam Lock	1-3/4"	**DCN4**	Cam Lock	1-3/4"
C8173	Door Lock	7/8"	**100DR**	Door Lock	7/8"
C8174 C8175	Door Lock	1-1/8" 1-3/8"	**100DR**	Door Lock	1-3/8"
C8178	Drawer Lock	7/8"	**200DW**	Drawer Lock	7/8"
C8177 C8179	Drawer Lock	1-1/8" 1-3/8"	**200DW**	Drawer Lock	1-3/8"
C8180	Drawer Lock	1-5/8"	**200DW**	Drawer Lock	1-5/8"
C8142	Sliding Door	1-1/8"	**300SD**	Sliding Door	1-1/8"
C8163	Drawer Lock	7/8"	**N078**	Drawer	1-1/8"
Not Available			**N078**	Drawer	1-3/8"
Not Available			**N078L/R**	Door	1-1/8"
Not Available			**N078L/R**	Door	1-3/8"
C8131	Drawer Latch	7/8"	**998/L20V**	Drawer Latch	7/8"
Not Available			**998/L20V**	Drawer Latch	1-3/8"
C8139	Door Latch	3/4"	**999**	Door Latch	7/8"
Not Available			**999**	Door Latch	1-3/8"
Not Available			**FC10**	File Cabinet	n/a
C8137	T-Bolt Drawer	1/4"	**T37**	T-Bolt Drawer	1/4"
C8140	Ratchet Lock	1/4"	**329R**	Rachet Lock	1/4"

CompX Disc Tumbler			Olympus Lock Cascade Series		
C8051	Cam Lock	7/16"	**951**	Cam Lock	7/16"
C8052	Cam Lock	5/8"	**952**	Cam Lock	5/8"
C8054	Cam Lock	15/16"	**954**	Cam Lock	15/16"
C8053	Cam Lock	1-3/16"	**953**	Cam Lock	1-3/16"
C8055	Cam Lock	1-7/16"	**955**	Cam Lock	1-7/16"
C8060	Cam Lock	1-3/4"	**960**	Cam Lock	1-3/4"
C8061	Cam Lock	2"	**961**	Cam Lock	2"
C8703	Deadbolt Drawer	15/16"	**973**	Deadbolt Drawer	15/16"
C8704	Deadbolt Door	15/16"	**974**	Deadbolt Door	15/16"
C8705	Deadbolt Drawer	1-3/16"	**975**	Deadbolt Drawer	1-3/16"

Best Access	Olympus Lock		
3L	**721 Series**	Door/Drawer Lock	Deadbolt
5E	**B7 Series**	Non-IC cam lock	Cam Lock
5L7RD	**725RD Series**	Door/Drawer Lock	Deadbolt
5L7RL	**725RL Series**	Door/Drawer Lock	Spring Latch
5L7MD	**725MD Series**	Door/Drawer Lock	Deadbolt
5L7ML	**725ML Series**	Door/Drawer Lock	Spring Latch
5L7RD-SL	**725RSL Series**	Door/Drawer Lock	Square Latch
8L	**728MBL**	Mailbox Lock	Spring Latch
1E7E4	**720 / 720B**	Door/Drawer	Cam Lock
1E7D4	**720B-DM**	Direct Drive	Cam Lock
2P73	**724VR**	File Cabinet Lock	Round Bolt
2S 2S-TBM	**722S** **722S-TBM**	Plunger Lock	Sliding Door
3S	**729R**	Ratchet Lock	Sliding Door
4S	**723S**	Through-glass	Sliding Door
Not Available	**L72V**	Drawer Lock	Spring Latch
Not Available	**950IC**	Drawer Lock	Deadlocking

Corbin/CCL Security Products			Olympus Lock R Series		
15748 15749 15750 15783	Cam Lock	5/8" 13/16" 1" 1"	**DCR1**	Cam Lock	1-1/16"
15890	Cam Lock	1-5/16"	**DCR3**	Cam Lock	1-7/16"
0666 1/2	Drawer Latch	7/8"	**996**	Drawer Latch	7/8"
0666 1/2	Drawer Latch	1-1/8"	**996**	Drawer Latch	1-3/8"
Not Available			**997**	Door Latch	7/8"
Not Available			**997**	Door Latch	1-3/8"
0737	Door Lock	3/4" 7/8"	**500DR**	Door Lock	7/8"
0737	Door Lock	1-1/8" 1-3/8"	**500DR**	Door Lock	1-3/8"
0738	Drawer Lock	3/4" 7/8"	**600DW**	Drawer Lock	7/8"
0738	Drawer Lock	1-1/8" 1-3/8"	**600DW**	Drawer Lock	1-3/8"
02063	Drawer Lock	7/8"	**R078**	Drawer Lock	1-1/8"
02291	Sliding Door	7/8"	**400SD**	Sliding Door	1"
Not Available			**429R**	Ratchet Lock	1/4"

CCL Security Products		Olympus Lock Enclosure Lock	
15481/55481	Latch Bolt Enclosure Lock	**E5L**	Latch Bolt Enclosure Lock
A15481/A55481	Dead Bolt Enclosure Lock	**E5D**	Dead Bolt Enclosure Lock
R557GSG	Latch Bolt/Warded Key	**P3L**	Latch Bolt/Warded Key

File Cabinet Locks		Olympus Lock* FC10 Series	
HON F24/F28	HON Original (disc tumbler)	**FC10**	File Cabinet Lock
SRS2185	SRS Replacement Lock (disc tumbler)	**FC10**	File Cabinet Lock
HON F26	Hon Original (disc tumbler)	**FC10 + FC26-AR**	File Cabinet Lock + Adapter Ring
SRS2190	SRS Replacement Lock (disc tumbler)	**FC10 + FC26-AR**	File Cabinet Lock + Adapter Ring

*Olympus equivalent locks are on National D4291/D4292 pin tumbler keyway.

Schlage Lock			Olympus Lock* 700/800 Series		
CL100PB	Door Lock	1-1/8"	**700SC**	Door Lock	1-1/8"
CL100PB	Door Lock	1-3/8"	**700SC**	Door Lock	1-3/8"
CL200PB	Drawer Lock	1-1/8"	**800SC**	Drawer Lock	1-1/8"
CL200PB	Drawer Lock	1-3/8"	**800SC**	Drawer Lock	1-3/8"

*Olympus provides Schlage C keyway only or less cylinder.

Schlage Lock - FSIC			Olympus Lock* FSIC		
CL777R	Door Lock	1-7/16"	**777ICP**	Door Lock	1-7/16"
CL888R	Drawer Lock	1-7/16"	**888ICP**	DrawerLock	1-7/16"
CL920R	Cam Lock	n/a	**920LM/DM**	Cam Lock	n/a
CL929R	Ratchet Lock	n/a	**929R**	Ratchet Lock	n/a

*Olympus provides lock bodies only (no cylinders) for Schlage full-size (large format) IC cores.

Sargent		Olympus Lock* 754/854 Series	
1654	Door Lock	**754LC**	Door Lock - less cylinder
1655	Door Lock	**754LC**	Door Lock - less cylinder
Not Available		**854LC**	Drawer Lock - less cylinder

*Locks are less cylinder for use with Sargent original cylinders.

CCL Disc Tumbler			Olympus Lock CCL Series		
02066	Deadbolt Drawer	15/16"	**266A**	Deadbolt Drawer	15/16"
02066	Deadbolt Drawer	1-1/8"	**266B**	Deadbolt Drawer	1-1/8"
02067	Deadbolt Door	15/16"	**267A**	Deadbolt Door	15/16"

OLYMPUS LOCK INC
Tel: 206.362.3290 | 800.525.0954
Fax 206.362.3569 | www.olympuslock.com

The following warning is applicable to all parts listed on this page:
WARNING: This product can expose you to chemicals including chromium, which is known to the State of California to cause cancer and birth defects or other reproductive harm. for more information go to www.P65Warnings.ca.gov.

▶ **7850** Combi-Cam 3-Dial

Combi-Cam™



Chrome



Black



Includes:
Pronged wood washer, fixing nut, three cams, 90º stop cam, cam screw, and lock washer



7850R Combi-Cam 3-Dial

Item	Finish	Cyl. Length	Fits Max. Material Thickness	Function
7850R-S 7850R-S-BLACK	Chrome Black	5/8"	3/8"	3-dial combination cam lock with up to 1,000 possible combinations. Easily resettable combination. Retrofits standard 3/4" diameter cam locks.
7850R-M 7850R-M-BLACK	Chrome Black	7/8"	5/8"	
7850R-L 7850R-L-BLACK	Chrome Black	1-1/8"	7/8"	
7850R-XL	Chrome	1-3/8"	1-1/8"	
7850-DC	Dust Cover	Accessory items [sold separately]		
7850-FP	Finger Pull			

SPECIFICATIONS

Keyless/Combination: 3-dial combination cam lock provides for up to 1,000 possible combinations.
Resettable: To change the combination, simply have it on the opening combination, depress the change pin, and change to the new combination.
Cam rotation: 90º stop cam placement allows cam to rotate (swing) to the right or left as you face the lock.
Body: Zinc, steel
Cylinder length: 5/8", 7/8", 1-1/8", or 1-3/8"
Barrel diameter: 3/4"
Finish: Chrome or Black
Packaged: 20 per box / 100 per case

INCLUDED ACCESSORIES

Pronged wood washer, fixing nut, 90º stop cam, cam screw and lock washer, and three cams (3/4" straight cam, 1-1/2" straight cam, 1-1/2" x 1/4" reversible offset cam).

OPTIONAL ACCESSORIES

Dust cover: #7850-DC -Conceal and protect dials from water, dust, etc.
Finger pull: #7850-FP - For use as cabinet handle. Mounts between Combi-Cam and cabinet surface.
Cams: Straight and offset cams (See below)



Dust Cover
#7850-DC



Finger Pull
#7850-FP

MOUNTING CUTOUT

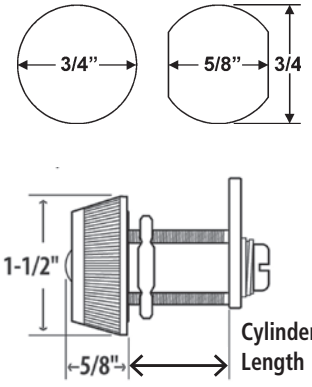

7850 SERIES — OPTIONAL CAMS

Width: 3/4"
Thickness: 1/8"

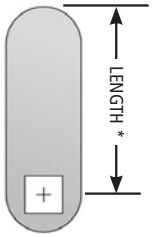

Straight Cams

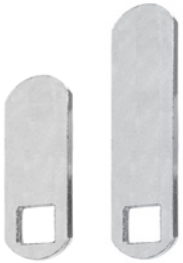

SKU: 7850-LC-1-19/64 7850-LC-1-15/16

Offset Cams

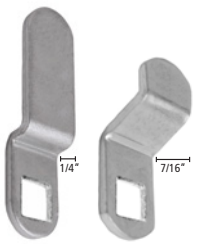

7850-OC-60MM 7850-OC-1-3/8

* **LENGTH** = The distance from the center of the mounting hole to the top of the cam.

SKU	Length*
7850-LC-1-19/64	1-19/64"
7850-LC-1-15/16	1-15/16"

SKU	Length*	Offset
7850-OC-1-3/8	1-3/8"	7/16"
7850-OC-60MM	2-1/3"	1/4"

The following warning is applicable to all parts listed on this page:
WARNING: This product can expose you to chemicals including chromium, which is known to the State of California to cause cancer and birth defects or other reproductive harm. for more information go to www.P65Warnings.ca.gov.

Tel: 206.362.3290 | 800.525.0954
Fax 206.362.3569 | www.olympuslock.com
OLYMPUS® LOCK INC

▶ **7803** Combi-Cam 4-Dial

Combi-Cam™



Chrome



Black



Includes:
Pronged wood washer, fixing nut, two cams, 90º stop cam, cam screw, and lock washer



SPECIFICATIONS

Keyless/Combination: 4-dial combination cam lock provides for up to 10,000 possible combinations.
Resettable: To change the combination, simply have it on the opening combination, depress the change pin, and change to the new combination.
Cam rotation: 90º stop cam placement allows cam to rotate (swing) to the right or left as you face the lock.
Body: Zinc, steel
Cylinder length: 5/8"
Barrel diameter: 3/4"
Finish: Chrome or Black
Packaged: 20 per box / 100 per case

INCLUDED ACCESSORIES

Pronged wood washer, fixing nut, 90º stop cam, cam screw and lock washer, and two cams (3/4" straight cam, 1-1/2" straight cam).

OPTIONAL ACCESSORIES

Finger pull: #7803-FP - For use as cabinet handle. Mounts between Combi-Cam and cabinet surface.
Cams: Straight and offset cams (See below)



Finger Pull
#7803-FP

7803 Combi-Cam 4-Dial

Item	Finish	Cyl. Length	Fits Max. Material Thickness	Function
7803S 7803S-BLACK	Chrome Black	5/8"	3/8"	4-dial combination cam lock with up to 10,000 possible combinations. Easily resettable combination. Retrofits standard 3/4" diameter cam locks.
7803-FP	Finger Pull	Accessory items (sold separately)		

MOUNTING CUTOUT

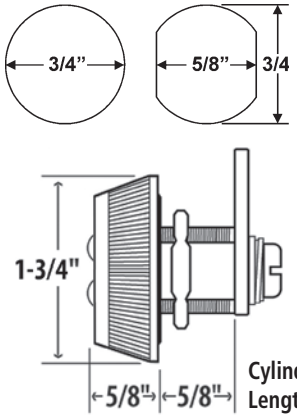

7803 — OPTIONAL CAMS

Width: 3/4"
Thickness: 1/8"

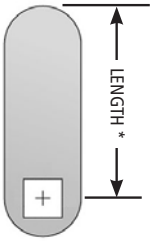

Straight Cams

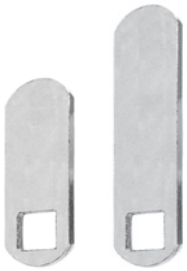

SKU: 7850-LC-1-19/64 7850-LC-1-15/16

Offset Cams

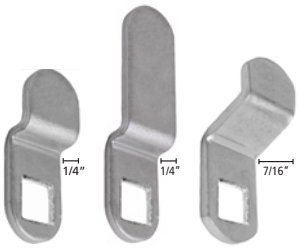

7850-OC 7850-OC-60MM 7850-OC-1-3/8

*** LENGTH =** The distance from the center of the mounting hole to the top of the cam.

SKU	Length*
7850-LC-1-19/64	1-19/64"
7850-LC-1-15/16	1-15/16"

SKU	Length*	Offset
7850-OC	1-1/2"	1/4"
7850-OC-1-3/8	1-3/8"	7/16"
7850-OC-60MM	2-1/3"	1/4"

The following warning is applicable to all parts listed on this page:
WARNING: This product can expose you to chemicals including chromium, which is known to the State of California to cause cancer and birth defects or other reproductive harm. for more information go to www.P65Warnings.ca.gov.

▶ **7440** Combi-Cam Ultra™ (Dual Access)

Combi-Cam™





Item	Finish	Cyl. Length	Fits Max. Material Thickness	Override Key Code	Function
7440S-KA374	Chrome	5/8"	3/8"	#KA374	3-dial combination cam/locker lock with key override and code retrieval. Up to 1,000 possible combinations.
7440S-BLK-KA168	Black	5/8"	3/8"	#KA168	
7440M-KA374	Chrome	7/8"	5/8"	#KA374	
7440M-BLK-KA168	Black	7/8"	5/8"	#KA168	
7440L-KA374	Chrome	1-1/8"	7/8"	#KA374	
7440L-BLK-KA168	Black	1-1/8"	7/8"	#KA168	
Override Keys are NOT included with locks — order separately as required (sold as a set of 2)					
7440-KEYS-168 7440-KEYS-374	Override keys, #168 (set of 2) Override keys, #374 (set of 2)				

OPTIONAL CAMS: See **100 Series** straight and offset dual-hole cams on page 82.

SPECIFICATIONS

Keyless/Combination: 3-dial combination cam/locker lock with key override and code retrieval capability offering convenient keyless access.
Resettable: Set the combination in three easy steps. Up to 1,000 possible combinations.
Installation: Can be installed vertically (door) or horizontally (drawer).
Barrel diameter: 3/4"
Cylinder lengths: 5/8", 7/8", or 1-1/8"
Body: Heavy duty die cast metal construction
Cam: Includes dual hole, 1-1/2" long straight cam for use in door or drawer applications.
Cam rotation: 90º stop cam placement allows cam to rotate 90º to the left or right.
Finish: Chrome or Black
Packaged: 20 per box / 100 per case

KEYING INFORMATION

Keyway: Tubular keyway. The Override Key allows for override or retrieval of the current combination. One key controls all locks in the same key code group.
Keys: Override keys are NOT included with locks. Order separately as required.
Override keying: Keyed alike

INCLUDED ACCESSORIES

Pronged wood washer, fixing nut, 90º stop cam, cam screw and lock washer, 1-1/2" dual hole, straight cam.

OPTIONAL ACCESSORIES

7440-KEYS: Override keys (set of 2). Specify key code when ordering.
100 Series Cams: Straight and offset dual-hole cams (page 82).

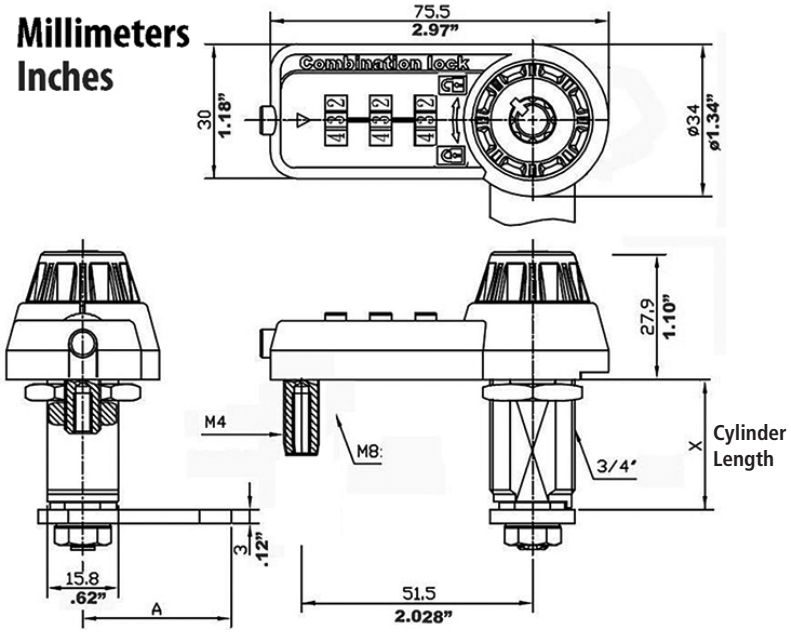

MOUNTING CUTOUT

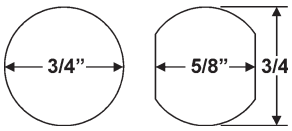

The Combi-Cam Ultra™ dual-access combination cam/locker lock offers key override AND patented code discovery. Manager key overrides locks when codes are forgotten, an employee leaves, etc. Code discovery allows the code to be discovered so that the combination can be set to a new code.

A wide range of optional cams are available. See **100 Series** optional straight and offset cams on page 82.

The following warning is applicable to all parts listed on this page:
WARNING: This product can expose you to chemicals including chromium, which is known to the State of California to cause cancer and birth defects or other reproductive harm. for more information go to www.P65Warnings.ca.gov.

Tel: 206.362.3290 | 800.525.0954
Fax 206.362.3569 | www.olympuslock.com

▶ 7445 Combi-Cam Ultra™ (Dual Access)

Combi-Cam™

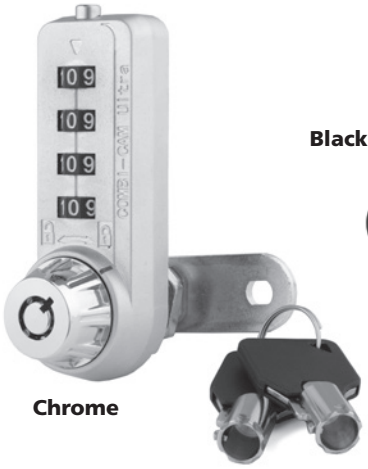







Item	Finish	Cyl. Length	Fits Max. Material Thickness	Override Key Code	Function
7445S-KA374	Chrome	5/8"	3/8"	#374	4-dial combination cam/locker lock with key override and code retrieval. Up to 10,000 possible combinations.
7445S-KA401	Chrome	5/8"	3/8"	#401	
7445S-BLK-KA168	Black	5/8"	3/8"	#168	
7445S-BLK-KA401	Black	5/8"	3/8"	#401	
7445M-KA374	Chrome	7/8"	5/8"	#374	
7445M-KA401	Chrome	7/8"	5/8"	#401	
7445M-BLK-KA374	Black	7/8"	5/8"	#374	
7445M-BLK-KA401	Black	7/8"	5/8"	#401	
7445L-KA374	Chrome	1-1/8"	7/8"	#374	
7445L-KA401	Chrome	1-1/8"	7/8"	#401	
7445L-BLK-KA374	Black	1-1/8"	7/8"	#374	
7445L-BLK-KA401	Black	1-1/8"	7/8"	#401	
Override Keys are not included with locks — order separately as required (sold as a set of 2)					
7445-KEYS-168	Override keys, #168 (set of 2)				
7445-KEYS-374	Override keys, #374 (set of 2)				
7445-KEYS-401	Override keys, #401 (set of 2)				

OPTIONAL CAMS: See **100 Series** straight and offset dual-hole cams on page 82.

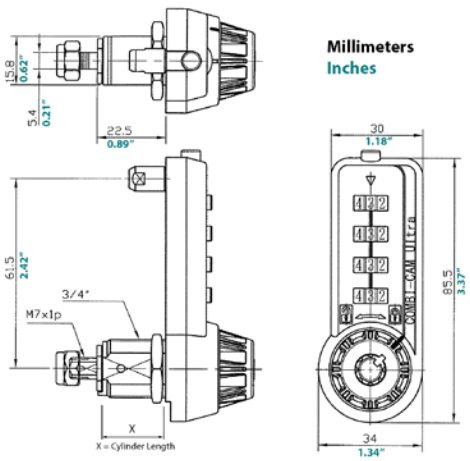

SPECIFICATIONS

Keyless/Combination: 4-dial combination cam/locker lock with key override and code retrieval capability offering convenient keyless access.
Resettable: Set the combination in three easy steps. Up to 10,000 possible combinations.
Installation: Can be installed vertically (door) or horizontally (drawer).
Barrel diameter: 3/4"
Cylinder lengths: 5/8", 7/8", or 1-1/8"
Body: Heavy duty die cast metal construction
Cam: Includes dual hole, 1-1/2" long straight cam for use in door or drawer applications.
Cam rotation: 90° stop cam placement allows cam to rotate 90° to the left or right.
Finish: Chrome or Black
Packaged: 20 per box / 100 per case

KEYING INFORMATION

Keyway: Tubular keyway. The Override Key allows for override or retreival of the current combination. One key controls all locks in the same key code group.
Keys: Override keys are NOT included with locks. Order separately as required.
Override keying: Keyed alike

INCLUDED ACCESSORIES

Pronged wood washer, fixing nut, 90° stop cam, cam screw and lock washer, 1-1/2" dual hole, straight cam.

OPTIONAL ACCESSORIES

7445-KEYS: Override keys (set of 2). Specify key code when ordering.
100 Series Cams: Straight and offset dual-hole cams (page 82).

MOUNTING CUTOUT

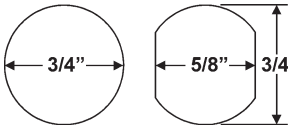

The Combi-Cam Ultra™ dual-access combination cam/locker lock offers key override AND patented code discovery. Manager key overrides locks when codes are forgotten, an employee leaves, etc. Code discovery allows the code to be discovered so that the combination can be set to a new code.

A wide range of optional cams are available. See **100 Series** optional straight and offset cams on page 82.

The following warning is applicable to all parts listed on this page:
WARNING: This product can expose you to chemicals including chromium, which is known to the State of California to cause cancer and birth defects or other reproductive harm. for more information go to www.P65Warnings.ca.gov.

▶ **DCP** Padlockable Cam Lock



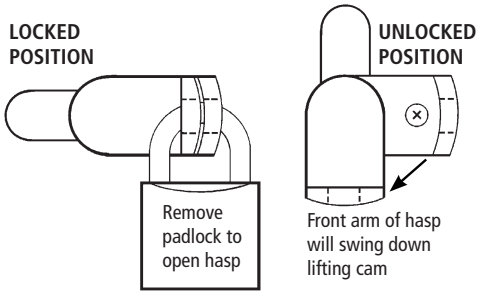

Item	Finish	Cyl. Length	Description
DCP	26D, US26, US3, US19	1-7/32"	Accepts most standard padlocks with a shackle diameter of 3/8" (10 mm) or less

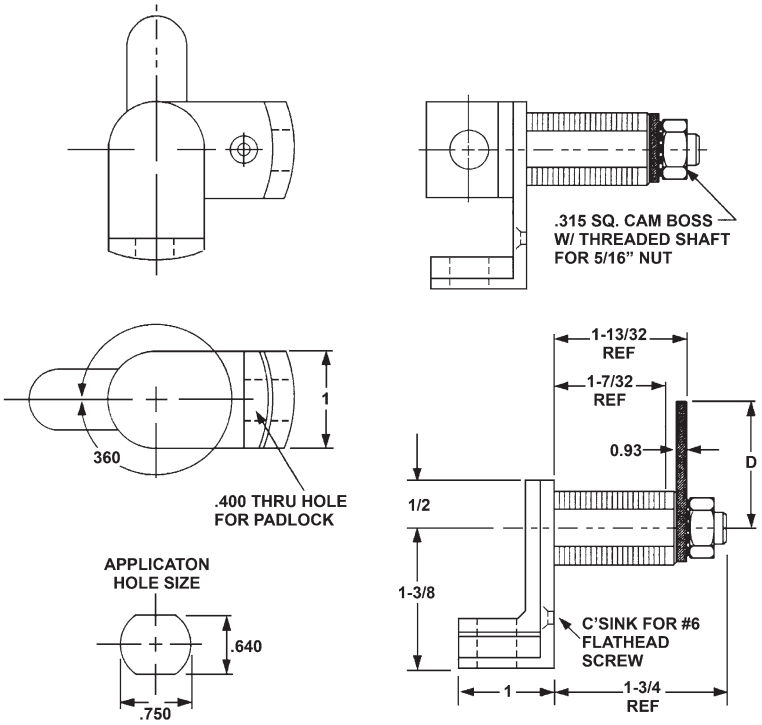

SPECIFICATIONS

Function: Cam lock for use with padlock as locking device. Functions on doors or drawers. Ideal for locker applications.
Through-hole: 0.4"
Padlocks: Not included
Max. material thickness: 1-1/8"
Barrel diameter: 3/4"
Finish: 26D, US26, US3, US19
Packaged: Packed 15 per box

INCLUDED ACCESSORIES

DCP-LC straight 1-1/4" cam
DCNP-SPW pronged wood washer

OPTIONAL ACCESSORIES

Anti-rotation plate: DCNP-500-ARP
Padlock bumper plates: DCP-SP1, and DCP-SP2. Available in US32 polished stainless steel or US26D brushed chrome plated.
Optional cams: See chart below

PADLOCKS

DCP works with most other manufacturer's padlocks with shackle diameter of 3/8" (10 mm) or less. See Olympus Lock's brass padlocks (pages 67-68).



OPTIONAL CAMS — for use with DCP and DCP500

STRAIGHT CAMS

Part No.	Dim. A
DCP-SC	7/8"
DCP-LC **	**1-1/4"**
DCP-LC-112	1-1/2"
DCP-LC-134	1-3/4"
DCP-LC-225	2-1/4"
DCP-LC-250	2-1/2"

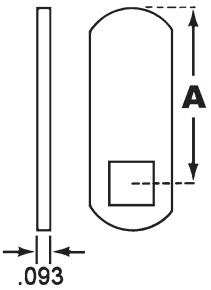

****DCP-LC** is included standard with DCP and DCP500. All other cams are available separately.

OFFSET CAMS

Part No.	Dim. A	Dim. B
DCP-1-14	1"	1/4"
DCP-LBC	1-1/4"	1/4"
DCP-114-18	1-1/4"	1/8"
DCP-118-18	1-1/8"	1/8"
DCP-114-38	1-1/4"	3/8"
DCP-LBC-138	1-3/8"	3/8"
DCP-LBC-178	1-7/8"	1/2"
DCP-112-14	1-1/2"	1/4"

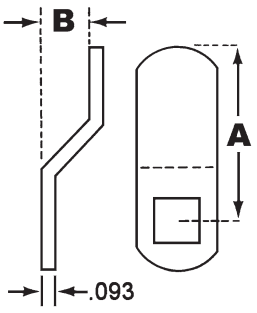

The following warning is applicable to all parts listed on this page:
WARNING: This product can expose you to chemicals including chromium, which is known to the State of California to cause cancer and birth defects or other reproductive harm. for more information go to www.P65Warnings.ca.gov.

Tel: 206.362.3290 | 800.525.0954
Fax 206.362.3569 | www.olympuslock.com

▶ **DCP500** Padlockable Cam Lock



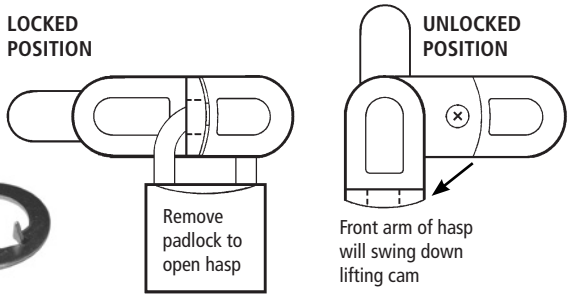

Item	Finish	Cyl. Length	Description
DCP500	26D, US26	1-7/32"	Accepts most standard padlocks with a shackle diameter of 3/8" (10 mm) or less

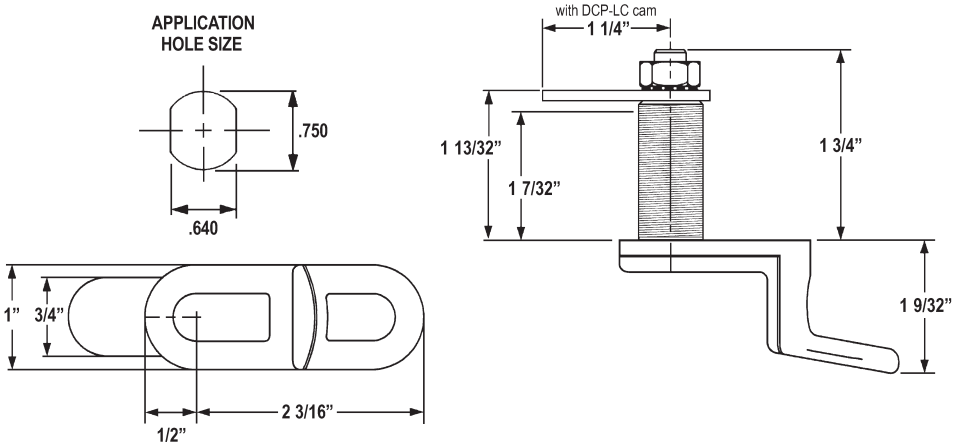

SPECIFICATIONS

Function: Cam lock for use with padlock as locking device. Functions on doors or drawers. Ideal for locker applications.
Through-hole: 0.4"
Padlocks: Not included
Max. material thickness: 1-1/8"
Barrel diameter: 3/4"
Finish: US26, US26D
Packaged: Packed 10 per box

INCLUDED ACCESSORIES

DCP-LC straight 1-1/4" cam
DCNP-SPW pronged wood washer

OPTIONAL ACCESSORIES

Anti-rotation plate: DCNP-500-ARP
Padlock bumper plates: DCP-SP1 and DCP-SP2. Available in US32 polished stainless steel or US26D brushed chrome plated.
Optional cams: See chart below

PADLOCKS

DCP500 works with most other manufacturer's padlocks with shackle diameter of 3/8" (10 mm) or less. See Olympus Lock's brass padlocks (pages 67-68).

BUMPER PLATES — for use with DCP and DCP500



Item	Finish	Handing	Description
DCP-SP1	26D, US32	For right-hand doors	Padlock bumper plate (protects face of cabinet from padlock)
DCP-SP2	26D, US32	For left-hand doors	Padlock bumper plate (protects face of cabinet from padlock)

DCP-SP2
Left-hand



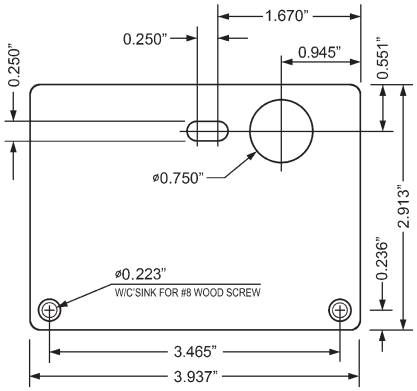

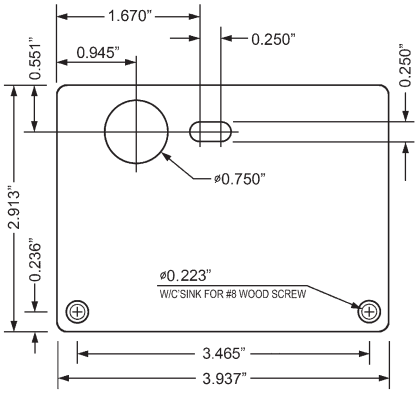

DCP-SP1
Right-hand



The following warning is applicable to all parts listed on this page:
WARNING: This product can expose you to chemicals including chromium, which is known to the State of California to cause cancer and birth defects or other reproductive harm. for more information go to www.P65Warnings.ca.gov.

GRAND MASTER KEYING

Before we can create a grand master key system, we need to have a realistic idea of the complete number of masters, sub masters and key codes that the system will require and whether there will be future expansion. Without this information at the beginning of the process, the options for future expansion may be limited. Grand master keying not available for Cascade Series disc tumbler locks.

SPECIAL STAMPING

Custom (non-stock) lock face and key stamping and/or engraving is available for an additional charge. See price list for details and pricing.

▶ N Series Keying

STOCK KEYING

4-pin standard: KD and KA# 101, 103, 107, 915

- **100/200/DCN:** Additional (4-pin) KA# 51001, 51002, 51003, 51004
- **T37:** Additional (4-pin) KA# 51001 through 51011 and 001 through 030

STOCK MASTER KEYING

5-pin standard: Orders ship with 2 master keys per project and 2 change keys per lock. Includes **4-digit numeric** key code stamped on the change keys and face of lock. Provide key schedule at time of order.

NON-STOCK MASTER KEYING

4-pin: Orders ship standard with 2 master keys per project and 2 change keys per lock. Includes **3-digit numeric** key code stamped on the change keys and face of lock. Provide key schedule at time of order.

5-pin: Orders ship standard with 2 master keys per project and 2 change keys per lock. Includes **4-digit numeric** key code stamped on the change keys and face of lock. Provide key schedule at time of order.

GRAND MASTER KEYING

5-pin: Orders ship standard with 2 grand master keys per project and 2 change keys per lock. Includes **4-digit numeric** key code stamped on the change keys and face of lock. Provide key schedule and full scope of project at time of order and indicate required number of sub master keys for each group. Sub master keys are charged separately.

▶ Schlage C Keying

STOCK KEYING

5-pin standard: KD and KA# 101, 102

STOCK MASTER KEYING

6-pin standard: Orders ship standard with 2 master keys per project and 2 change keys per lock. Includes numeric key code stamped on the change keys. Lock face stamping available separately. Provide key schedule at time of order.

NON-STOCK MASTER KEYING

5-pin: Locks ship standard with 2 master keys per project and 2 change keys per lock. Includes numeric key code stamped on the change keys. Lock face stamping available separately. Provide key schedule at time of order.

6-pin: Locks ship standard with 2 master keys per project and 2 change keys per lock. Includes numeric key code stamped on the change keys. Lock face stamping available separately. Provide key schedule at time of order.

GRAND MASTER KEYING

5-pin: Orders ship standard with 2 grand master keys per project and 2 change keys per lock. Includes numeric key code stamped on the change keys. Lock face stamping available separately. Provide key schedule and full scope of project at time of order and indicate required number of sub master keys for each group. Sub master keys are charged separately.

6-pin: Orders ship standard with 2 grand master keys per project and 2 change keys per lock. Includes numeric key code stamped on the change keys. Lock face stamping available separately. Provide key schedule and full scope of project at time of order and indicate required number of sub master keys for each group. Sub master keys are charged separately.

▶ R Series Keying

STOCK KEYING

5-pin standard: KD and KA# 4T2, 4T3

STOCK MASTER KEYING

5-pin standard: Orders ship standard with 2 master keys per project and 2 change keys per lock. Includes **3-digit numeric** key code stamped on the change keys and face of lock. Provide key schedule at time of order.

NON-STOCK MASTER KEYING

5-pin: Orders ship standard with 2 master keys per project and 2 change keys per lock. Includes **3-digit numeric** key code stamped on the change keys and face of lock. Provide key schedule at time of order.

***6-pin:** Orders ship standard with 2 master keys per project and 2 change keys per lock. Includes numeric key code stamped on the change keys and face of lock. Provide key schedule at time of order.

GRAND MASTER KEYING

5-pin: Orders ship standard with 2 grand master keys per project and 2 change keys per lock. Includes numeric key code stamped on the change keys and face of lock. Provide key schedule and full scope of project at time of order and indicate required number of sub master keys for each group. Sub master keys are charged separately.

***6-pin:** Orders ship standard with 2 grand master keys per project and 2 change keys per lock. Includes numeric key code stamped on the change keys and face of lock. Provide key schedule and full scope of project at time of order and indicate required number of sub master keys for each group. Sub master keys are charged separately.

** **6-pin keying note:** Available on 500, 600, 996, and 997 series locks only.*

▶ SFIC Keying

STOCK KEYING

N/A: All cores are custom keyed. Specify keyway and type of keying at time of order.

CUSTOM (KA/KD) / MASTER KEYING

6-pin or 7-pin: Orders ship standard with 2 change keys per core. Includes numeric key code stamped on the change keys. 2 additional cut keys (master keys and/or control keys—specify at time of order) are included with each order and/or project. Provide key schedule at time of order. Additional keys may be purchased separately.

GRAND MASTER KEYING

6-pin or 7-pin: Orders ship standard with 2 change keys per core. Includes numeric key code stamped on the change keys. 2 additional cut keys (master keys and/or control keys—specify at time of order) are included with each project. Provide key schedule and full scope of project at time of order and indicate required number of sub master keys for each group. Sub master keys are charged separately.

▶ Cascade Keying

STOCK KEYING

5-disc standard: KD, MKKD [120 codes] and KA# C346A, C390A, C413A, C415A, C420A, C452A

CUSTOM KEYING

5-disc standard: Orders ship with 2 change keys per lock. Master keys must be purchased separately. Lock face stamping/engraving is available for an upcharge. Provide key schedule at time of order. 380 total KD or MKKD codes available if custom keyed. Grand master keying not available.

The following warning is applicable to all parts listed on this page:
WARNING: This product can expose you to chemicals including chromium, which is known to the State of California to cause cancer and birth defects or other reproductive harm. for more information go to www.P65Warnings.ca.gov.

Tel: 206.362.3290 | 800.525.0954
Fax 206.362.3569 | www.olympuslock.com

▶ 951 - 961 Cam Locks

951-952 now available!

NEW

DISC TUMBLER
CASCADE SERIES™



Passed ANSI/BHMA A156.11 Grade 2 cycle test

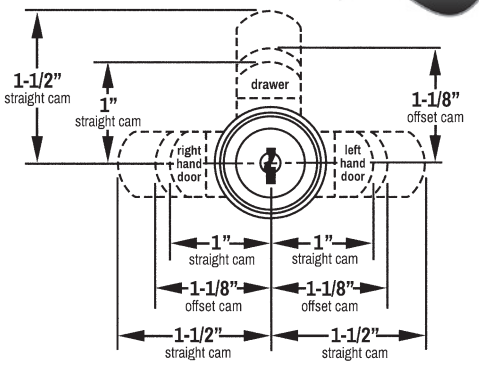

Dimensional offset of 1-1/8" cam is 11/32"

Item	Finish	Cylinder Length	Maximum Material Thickness	Inner Box Quantity	Case Quantity
951	14A, US19	7/16"	7/64"	15/box	120/case
952	14A, US19	5/8"	15/64"	15/box	120/case
954	14A, US19	15/16"	5/8"	15/box	120/case
953	14A, US19	1-3/16"	7/8"	15/box	120/case
955	14A, US19	1-7/16"	1-1/8"	15/box	120/case
960	14A, US19	1-3/4"	1-7/16"	15/box	120/case
961	14A, US19	2"	1-13/16"	15/box	120/case

Item	Cylinder Length/ Straight Cam (Y)	Max. Mat. Thickness (A)	Inbent Cam (X)	Outbent Cam (Z)
951	7/16"	7/64"	3/32"	25/32"
952	5/8"	15/64"	9/32"	31/32"
954	15/16"	5/8"	19/32"	1-9/32"
953	1-3/16"	7/8"	27/32"	1-17/32"
955	1-7/16"	1-1/8"	1-3/32"	1-25/32"
960	1-3/4"	1-7/16"	1-13/32"	2-3/32"
961	2"	1-13/16"	1-21/32"	2-11/32"

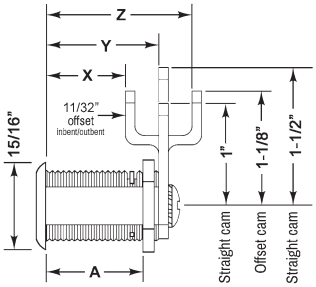

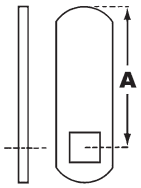

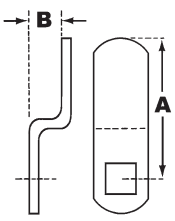

KEYBLANKS, CUT KEYS, KEYING KIT

Item	Description
KB-D85-C-NP KB-D85-C-CUST	Key blank (for NON-MK locks) Custom cut change key (for NON-MK locks)
KB-D83-D-NP KB-D83-D-CUST	Key blank (for MK locks) Custom cut change key (for MK locks)
KB-D84-E-MK	Cut master key E41A (for MK locks)
KB-D85-XXXX	Cut key for stock KA XXXX [where XXXX = KA key code]
D1	DISC Keying Kit (KA/KD/MK)

SPECIFICATIONS

Keying: Will key together with CompX National disc tumbler locks
Assembly: Ships with body and cylinder assembled for fast and easy installation
ANSI/BHMA: Passed ANSI/BHMA Grade 2 cycle test: 20,000 cycles, including key insertion and removal [E07262]
US Patents: 11,959,316; D1016604
Body: Zinc die cast
Cylinder: Zinc die cast, 5 disc tumbler
Standard function: 90 degree cam rotation, key removable in locked and unlocked position
Key retaining: Key removable in the locked position only (available for an upcharge).
Cams: Ships with one straight and one offset cam
Spur Washer: Ships with anti-rotation, eyelet spur washer (which can be locked into place for a more secure mounting)
Finish: 14A (bright nickel) or US19 (matte black)
Packaged: Packed 15 per box, 120 per case

KEYING INFORMATION

Keyway: Cascade Series (equivalent to National 5-disc system)
Keys: Includes 2 keys per lock
Stock keying: KA, KD or MKKD [NOTE: stock KD/MKKD max 120 codes. [Max 380 KD/MKKD codes if custom keyed]
Stock KA#: C346A, C390A, C413A, C415A, C420A, C452A
Custom keying: MKKA and/or MKKD to schedule
Engraving: Lock face engraving with key code available (with upcharge)
Keyblanks:
KB-D85-C-NP Key blank (for NON-MK locks)
KB-D83-D-NP Key blank (for MK locks)
Keying Kit:
D1 Disc tumbler keying kit for KA, KD and MK

INCLUDED ACCESSORIES

P95-SPW - eyelet spur washer *Patent Pending*
P95-FN-Z - fixing nut
P95-TR - trim ring
P95-CS - cam screw with star washer
P95-RS - retainer staple

INCLUDED CAMS

951-952: P95-CM-6 (1" straight cam) and P95-CM-2 (1-1/8" long with 11/32" offset cam)
953-961: P95-CM-1 (1-1/2" straight cam) and P95-CM-2 (1-1/8" long with 11/32" offset cam)

OPTIONAL CAMS

Part No.	Dim. A [length]	Dim. B [offset]	Description
P95-CM-1 **	1-1/2"	-	Straight cam
P95-CM-3	3"	-	Straight cam
P95-CM-5	1-1/2"	-	Straight **hook** cam
P95-CM-6 **	1"	-	Straight cam
P95-CM-7	5/8"	-	Straight cam
P95-CM-2 **	1-1/8"	11/32"	Offset cam
P95-CM-4	1-5/8"	11/32"	Offset cam

** P95-CM-6 and P95-CM-2 are included standard with 951-952 locks. P95-CM-1 and P95-CM-2 are included standard with 953-961 locks. All other cams are available separately.

The following warning is applicable to all parts listed on this page:
WARNING: This product can expose you to chemicals including chromium, which is known to the State of California to cause cancer and birth defects or other reproductive harm. for more information go to www.P65Warnings.ca.gov.

▶ 973 - 975 Deadbolt Locks

DISC TUMBLER
CASCADE SERIES™



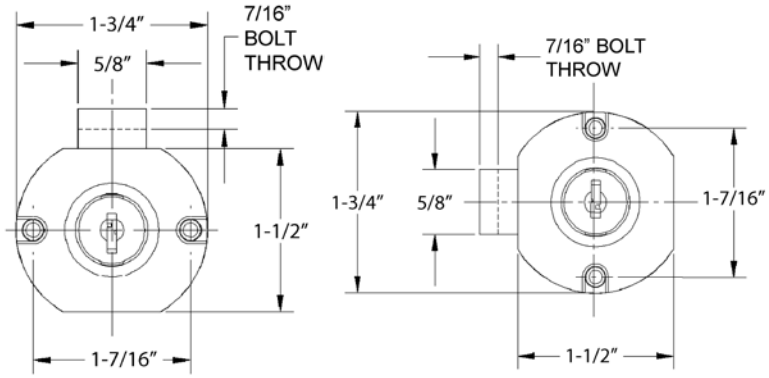

Item	Finish	Barrel Length	Inner Box Quantity	Case Quantity
973	14A, US19	15/16"	15/box	120/case
975	14A, US19	1-3/16"	15/box	120/case
974	14A, US19	15/16"	15/box	120/case

NEW

KEYBLANKS, CUT KEYS, KEYING KIT

Item	Description
KB-D85-C-NP KB-D85-C-CUST	Key blank (for NON-MK locks) Custom cut change key (for NON-MK locks)
KB-D83-D-NP KB-D83-D-CUST	Key blank (for MK locks) Custom cut change key (for MK locks)
KB-D84-E-MK	Cut master key E41A (for MK locks)
KB-D85-XXXX	Cut key for stock KA XXXX [where XXXX = KA key code]
D1	DISC Keying Kit (KA/KD/MK)

SPECIFICATIONS

Keying: Will key together with CompX/National style disc tumbler locks
Body: Zinc die cast
Cylinder: Zinc die cast, 5 disc tumbler
Cylinder removal: Cylinder can be removed with control key. Control key sold separately.
Standard function: Key removable in locked or unlocked position.
Barrel diameter: 7/8"
Finish: 14A (bright nickel) or US19 (matte black)
Packaged: Packed 15 per box, 120 per case

KEYING INFORMATION

Keyway: Cascade Series (equivalent to National 5-disc system)
Keys: Includes 2 keys per lock
Stock keying: KD (120 KD codes), MKKD (120 MKKD codes)
Stock KA#: C346A, C390A, C413A, C415A, C420A, C452A
Custom keying: MKKA or combination of MKKA/MKKD* to schedule (*NOTE: there are a maximum of 380 MKKD codes if custom keyed. If you require more key codes, see our DCN series pin-tumbler products.)
Keyblanks:
KB-D85-C-NP Key blank (for NON-MK locks)
KB-D83-D-NP Key blank (for MK locks)

INCLUDED ACCESSORIES

Keys - 2 change keys per lock

OPTIONAL ACCESSORIES

Control key - KB-DC97-NP
Keyblanks - KB-D83/KB-D85
Keying Kit - D1

The following warning is applicable to all parts listed on this page:
WARNING: This product can expose you to chemicals including chromium, which is known to the State of California to cause cancer and birth defects or other reproductive harm. for more information go to www.P65Warnings.ca.gov.

Tel: 206.362.3290 | 800.525.0954
Fax 206.362.3569 | www.olympuslock.com
OLYMPUS® LOCK INC

▶ 266 - 267 Deadbolt Locks

266A, 266B



267A



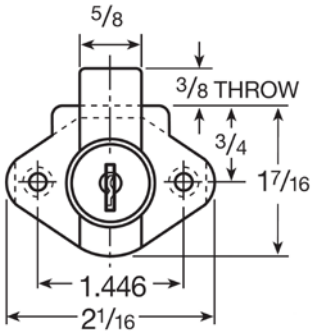

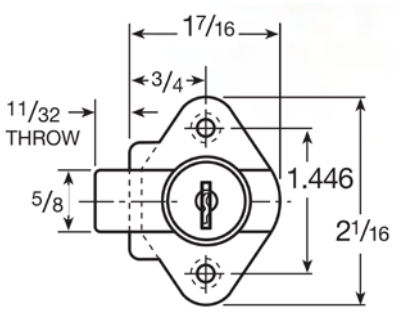

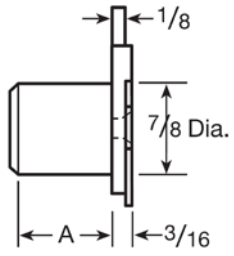

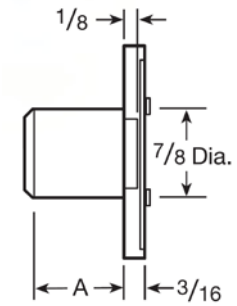

Item	Finish	Barrel Length	Inner Box Quantity	Case Quantity
266A	26D	15/16"	15/box	120/case
266B	26D	1-1/8"	15/box	120/case
267A	26D	15/16"	15/box	120/case

SPECIFICATIONS

Keying: Will match keying of CCL 02066 and 02067 Disc Tumbler Locks.
Body: Zinc die cast
Cylinder: Zinc die cast, 5 disc tumbler
Standard function: Key removable in locked or unlocked position.
Barrel diameter: 7/8"
Finish: 26D
Packaged: Packed 15 per box, 120 per case

KEYING INFORMATION

Keyway: CCL Disc Tumbler
Keys: Includes 2 keys per lock
Stock keying: KD (120 KD codes)
Stock KA#: AUE1, AUE8, AUE 48, CAT30, CAT60
Keyblanks:
KB-C5D-NP Keyblank (CCL 5 disc key blank)
KB-C6D-NP Keyblank (CCL 6 disc key blank)

INCLUDED ACCESSORIES

Keys - 2 change keys per lock

OPTIONAL ACCESSORIES

Keyblanks - KB-C5D-NP, KB-C6D-NP

KEYBLANKS, CUT KEYS

Item	Description
KB-C5D-NP	CCL 5 Disc Keyblank
KB-C6D-NP	CCL 5 Disc Keyblank
KB-AUE1-NP	Cut key for KA #AUE1
KB-AUE8-NP	Cut key for KA #AUE8
KB-AUE48-NP	Cut key for KA #AUE48
KB-CAT30-NP	Cut key for KA #CAT30
KB-CAT60-NP	Cut key for KA #CAT60



The following warning is applicable to all parts listed on this page:
WARNING: This product can expose you to chemicals including chromium, which is known to the State of California to cause cancer and birth defects or other reproductive harm. for more information go to www.P65Warnings.ca.gov.

▶ 100DR | 100B | 100M Deadbolt Lock



ANSI/BHMA
A156.11 Grade 1
E07121

Woodwork Institute (WI) acknowledged product

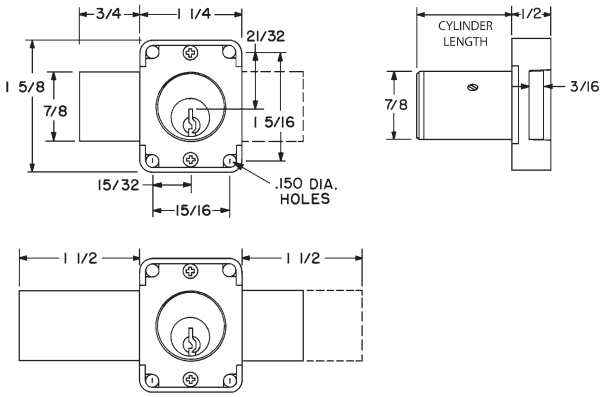

LB: Long bolt option

100DR

Function: Standard function lock
Includes: 2 keys, 56-1 bar strike, and lock mounting screws

100B - Weather Resistant

Function: Weather resistant construction. Suitable for outdoor use in covered areas only.
Includes: 2 keys, 56-1 bar strike, and lock mounting screws

100M - MRI Function

Function: MRI locks are made of all non-magnetic materials and components specifically for use in MRI medical applications.
Includes: 2 keys, 56-1 bar strike, and lock mounting screws (keys, components and materials are non-ferrous/non-magnetic)

100DR

Item	Function	Finish	Cyl. Length	Keying
100DR	Door	26D, US4, 10B, US19	15/16"	KD, KA 101,103,107,915 KA 51001,51002,51003,51004*note Custom keyed
100DR	Door	26D, US4, 10B	1-3/8"	
Key-retaining:		Specify item **100KL** for left-hand doors and **100KR** for right-hand doors. (**KL** and **KR** designation are *only required for key retaining locks*).		
Long bolt:		Specify **LB** for long bolt installed in lock.		

100B - B Series (Weather Resistant)

Item	Function	Finish	Cyl. Length	Keying
100B	Door	26D, US4, 10B, US19	15/16"	KD, KA 101,103,107,915 KA 51001,51002,51003,51004*note Custom keyed
100B	Door	26D, US4, 10B	1-3/8"	
Key-retaining:		Specify item **100BKL** for left-hand doors and **100BKR** for right-hand doors. (**BKL** and **BKR** designation are *only required for key retaining B Series locks*).		
Long bolt:		Specify **LB** for long bolt installed in lock.		

100M - MRI Function (Non-Magnetic)

Item	Function	Finish	Cyl. Length	Keying
100M	Door	26D	15/16" or 1-3/8"	KD, KA 101,103,107,915 KA 51001,51002,51003,51004*note Custom keyed
Key-retaining (MRI):		Specify item **100MKL** for left-hand doors and **100MKR** for right-hand doors. (**MKL** and **MKR** designation are *only required for key retaining MRI locks*).		
Long bolt:		Specify **LB** for long bolt installed in lock.		

*note *KA# 51001, 51002, 51003 and 51004 available in US26D finish only*

SPECIFICATIONS

Keying: Can be keyed together with other N Series locks
Rekeyable: Easily rekeyable via set screw cylinder release mechanism
ANSI/BHMA: Passed ANSI/BHMA A156.11 Grade 1 performance requirements. Equivalent to E07121(100DR) / E07041(200DW).
Standard function: Key removable in locked or unlocked position. Standard function locks are non-handed.
Key-retaining: Key removable in locked position only. Specify handing (KL/KR for doors or KI/KV for drawers) when ordering.
US Patent Nos: 4,899,563; 4,920,774
Body: Zinc die cast
Cylinder: Solid brass, pin tumbler
Cylinder length: 15/16" or 1-3/8"
Barrel diameter: 7/8"
Finish: 26D, US4, 10B or US19
Packaged: Packed 10 per box

KEYING INFORMATION

Keyway: N Series (equivalent to National D4291 4-pin or D4292 5-pin system)
Keys: Includes 2 keys per lock
Stock keying: KD/KA - 4 pin standard
Stock KA#: 101, 103, 107, 915, 51001, 51002, 51003, 51004*note
Masterkeyed: 5 pin standard
Grand masterkeyed: Available
Keyblank 4-pin: KBN-4-NP (equivalent to NA14, 1069L)
Keyblank 5-pin: KBN-5-NP (equivalent to NA12, 1069LA)
Keyblank 5-pin copper plated: KBN-5B (use with 100M/200M MRI locks)

INCLUDED ACCESSORIES

100DR/100B: 2 keys, 56-1 bar strike, and lock mounting screws
100M: 2 keys, 56-1 bar strike, and lock mounting screws (keys, components and materials are non-ferrous/non-magnetic)

OPTIONAL ACCESSORIES

See the accessories section of this catalog for a complete list.

Spacers: WP20 (3/16" thick), WP21 (3/32" thick), WP22 (1/4" thick), WP23 (1/2" thick)
Strikes: 07S, 12-1, 12-2, 12-3, 12-5, 12-4, 56-1
Trim ring: TR1256
Through-bolt hardware: ETS2 trim plate, ETS2-PL trim pull and ETST2 template
Long bolt (bolt only): 15-1-35 for use with 100DR/100B/100M

The following warning is applicable to all parts listed on this page:
WARNING: This product can expose you to chemicals including chromium, which is known to the State of California to cause cancer and birth defects or other reproductive harm. for more information go to www.P65Warnings.ca.gov.

Tel: 206.362.3290 | 800.525.0954
Fax 206.362.3569 | www.olympuslock.com

▶ 200DW | 200B | 200M Drawer Lock



ANSI/BHMA A156.11 Grade 1 E07041

Woodwork Institute (WI) acknowledged product

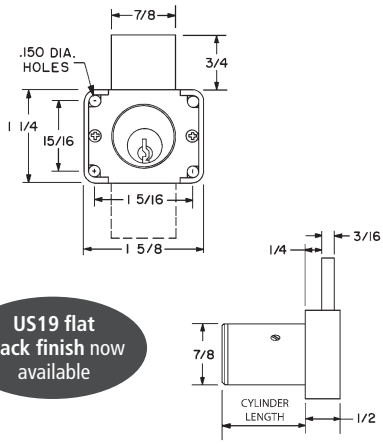

US19 flat black finish now available

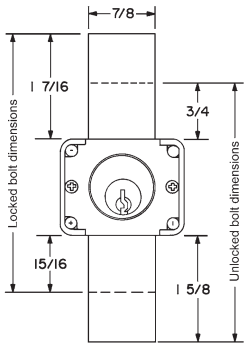

LB: Long bolt option

200DW

Function: Standard function lock
Includes: 2 keys, 12-3 bar strike, and lock mounting screws

200B - Weather Resistant

Function: Weather resistant construction. Suitable for outdoor use in covered areas only.
Includes: 2 keys, 12-3 bar strike, and lock mounting screws

200M - MRI Function

Function: MRI locks are made of all non-magnetic materials and components specifically for use in MRI medical applications.
Includes: 2 keys, 56-1 bar strike, and lock mounting screws (keys, components and materials are non-ferrous/non-magnetic)

200DW

Item	Function	Finish	Cyl. Length	Keying
200DW	Drawer	26D, US4, 10B, US19	15/16" or 1-3/8"	KD, KA 101,103,107,915 KA 51001,51002,51003,51004*note Custom keyed
200DW	Drawer	26D, 10B	1-5/8"	
Key-retaining:		Specify item **200KI** for inverted drawers and **200KV** for vertical drawers. (**KI** and **KV** designations are *only required for key retaining locks*).		
Long bolt:		Specify **LB** for long bolt installed in lock.		

200B - B Series (Weather Resistant)

Item	Function	Finish	Cyl. Length	Keying
200B	Drawer	26D, US4, 10B, US19	15/16" or 1-3/8"	KD, KA 101,103,107,915 KA 51001,51002,51003,51004*note Custom keyed
200B	Drawer	26D, 10B	1-5/8"	
Key-retaining:		Specify item **200BKI** for inverted drawers and **200BKV** for vertical drawers. (**BKI** and B**KV** designations are *only required for key retaining locks*).		
Long bolt:		Specify **LB** for long bolt installed in lock.		

200M - MRI Function (Non-Magnetic)

Item	Function	Finish	Cyl. Length	Keying
200M	Drawer	26D	15/16", 1-3/8" or 1-5/8"	KD, KA 101,103,107,915 KA 51001,51002,51003,51004*note Custom keyed
Key-retaining (MRI):		Specify item **200MKI** for inverted drawers and **200MKV** for vertical drawers. (**MKI** and **MKV** designations are *only required for key retaining MRI locks*).		
Long bolt:		Specify **LB** for long bolt installed in lock.		

*note *KA# 51001, 51002, 51003 and 51004 available in US26D finish only*

SPECIFICATIONS

Keying: Can be keyed together with other N Series locks
Rekeyable: Easily rekeyable via set screw cylinder release mechanism
ANSI/BHMA: Passed ANSI/BHMA A156.11 Grade 1 performance requirements. Equivalent to E07121(100DR) / E07041(200DW).
Standard function: Key removable in locked or unlocked position. Standard function locks are non-handed.
Key-retaining: Key removable in locked position only. Specify handing (KL/KR for doors or KI/KV for drawers) when ordering.
US Patent Nos: 4,899,563; 4,920,774
Body: Zinc die cast
Cylinder: Solid brass, pin tumbler
Cylinder length: 15/16", 1-3/8" or 1-5/8"
Barrel diameter: 7/8"
Finish: 26D, US4, 10B or US19
Packaged: Packed 10 per box

KEYING INFORMATION

Keyway: N Series (equivalent to National D4291 4-pin or D4292 5-pin system)
Keys: Includes 2 keys per lock
Stock keying: KD/KA - 4 pin standard
Stock KA#: 101, 103, 107, 915, 51001, 51002, 51003, 51004*note
Masterkeyed: 5 pin standard
Grand masterkeyed: Available
Keyblank 4-pin: KBN-4-NP (equivalent to NA14, 1069L)
Keyblank 5-pin: KBN-5-NP (equivalent to NA12, 1069LA)
Keyblank 5-pin copper plated: KBN-5B (use with 100M/200M MRI locks)

INCLUDED ACCESSORIES

200DW/200B: 2 keys, 12-3 angle strike, and lock mounting screws
200M: 2 keys, 56-1 bar strike, and lock mounting screws (keys, components and materials are non-ferrous/non-magnetic)

OPTIONAL ACCESSORIES

See the accessories section of this catalog for a complete list.

Spacers: WP20 (3/16" thick), WP21 (3/32" thick), WP22 (1/4" thick), WP23 (1/2" thick)
Strikes: 07S, 12-1, 12-2, 12-3, 12-5, 12-4, 56-1
Trim ring: TR1256
Through-bolt hardware: ETS2 trim plate, ETS2-PL trim pull and ETST2 template
Long bolt (bolt only): 15-1-35 for use with 200DW/200B/200M locks

The following warning is applicable to all parts listed on this page:
WARNING: This product can expose you to chemicals including chromium, which is known to the State of California to cause cancer and birth defects or other reproductive harm. for more information go to www.P65Warnings.ca.gov.

▶ **DCN** Cam Lock



Locks in all eight positions with 2 reversible cams

MOUNTING CUTOUT

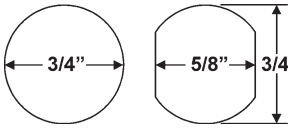

ANSI/BHMA A156.11 Grade 1 E07261 / E07271

Woodwork Institute (WI) acknowledged product

Item	Finish	Cyl. Length	Keying
DCN1	26D, US3, 10B, US19	1-1/16"	KD, KA 101,103,107,915 KA 51001,51002,51003,51004*note Custom keyed
DCN2	26D, US3, 10B, US19	1-3/16"	
DCN3	26D, US3, 10B, US19	1-7/16"	
DCN4	26D, US3, 10B, US19	1-3/4"	
Cylinder length: As measured with straight cam.			

*note *KA# 51001, 51002, 51003 and 51004 available in US26D finish only*

DIMENSIONS

	For Mat. Thickness	Straight Cam (X)	Inbent Cam (Y)	Outbent Cam (Z)	Cylinder Length (A)
DCN1	3/4"	1-1/16"	3/4"	1-3/8"	1"
DCN2	7/8"	1-3/16"	7/8"	1-1/2"	1-1/8"
DCN3	1-1/8"	1-7/16"	1-1/8"	1-3/4"	1-3/8"
DCN4	1-1/2"	1-13/16"	1-1/2"	2-1/8"	1-3/4"

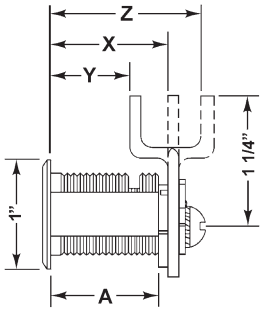

SPECIFICATIONS

Keying: Can be keyed together with other N Series locks
Rekeyable: Easily rekeyable via cylinder retainer clip
ANSI/BHMA: Passed ANSI/BHMA A156.11 Grade 1 performance requirements. Equivalent to E07261 / E07271.
US Patent Nos: 5,038,589; 5,737,950
Body: Zinc die cast
Cylinder: Zinc die cast, pin tumbler
Standard function: Key removable in locked or unlocked position.
Key retaining function: Alternate key-retaining shifters (page 79) are available separately for key removable in locked position only.
Cams: 2 reversible cams work in all positions
Face: 1 " face covers splintering, no additional trim ring required
Finish: 26D, US3, 10B or US19
Packaged: Packed 10 per box

KEYING INFORMATION

Keyway: N Series (equivalent to National D4291 4-pin or D4292 5-pin system)
Keys: Includes 2 keys per lock
Stock keying: KD/KA - 4 pin standard
Stock KA#: 101, 103, 107, 915, 51001, 51002, 51003, 51004*note
Masterkeyed: 5 pin standard
Grand masterkeyed: Available
Keyblank 4-pin: KBN-4-NP (equivalent to NA14, 1069L)
Keyblank 5-pin: KBN-5-NP (equivalent to NA12, 1069LA)

INCLUDED ACCESSORIES

See below.

OPTIONAL ACCESSORIES

See pages 83-84 for a complete list of optional cam sizes and other accessories for use with DCN cam locks.

DCNP-200-KR: Key retaining drawer cam shifter
DCNP-200-KDR: Key retaining door cam shifter

INCLUDED ACCESSORIES

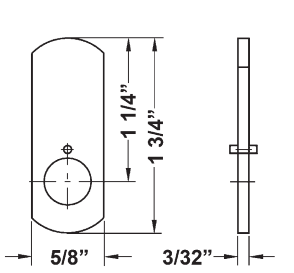

DCNP-100-SC
straight cam

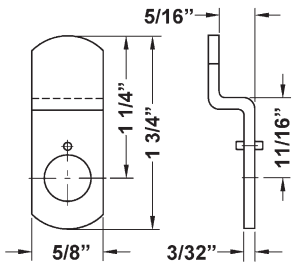

DCNP-100-BC
offset reversible cam

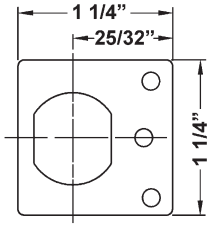

DCNP-500-ARP
anti-rotation plate



DCNP-200-OCD
lost-motion cam shifter

The following warning is applicable to all parts listed on this page:
WARNING: This product can expose you to chemicals including chromium, which is known to the State of California to cause cancer and birth defects or other reproductive harm. for more information go to www.P65Warnings.ca.gov.

Tel: 206.362.3290 | 800.525.0954
Fax 206.362.3569 | www.olympuslock.com

OLYMPUS® LOCK INC

▶ **300SD** Plunger Lock

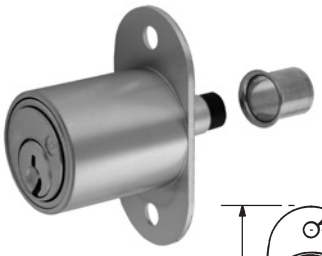

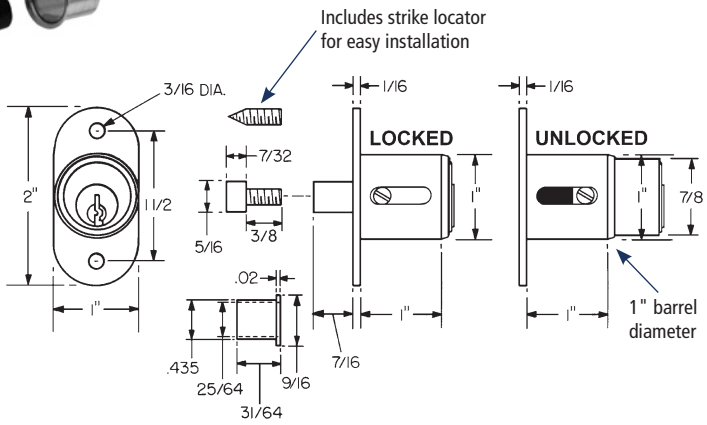

Max. bolt projection using optional threaded bolt extender is 27/32"

Item	Finish	Cyl. Length	Keying
300SD	26D, US3, 10B	1"	KD, KA 101,103,107,915 Custom Keyed

SPECIFICATIONS

Keying: Can be keyed together with other N Series locks
Rekeyable: Easily rekeyable via speed-release cylinder release mechanism
US Patent Nos: 4,920,774; 5,121,619
Standard function: Key removable in locked or unlocked position.
Body: Zinc die cast
Cylinder: Solid brass, pin tumbler
Cylinder length: 1"
Barrel diameter: 1"
Finish: 26D, US3 or 10B
Packaged: Packed 10 per box

KEYING INFORMATION

Keyway: N Series (equivalent to National D4291 4-pin or D4292 5-pin system)
Keys: Includes 2 keys per lock
Stock keying: KD/KA - 4 pin standard
Stock KA#: 101, 103, 107, 915
Masterkeyed: 5 pin standard
Grand masterkeyed: Available
Keyblank 4-pin: KBN-4-NP (equivalent to NA14, 1069L)
Keyblank 5-pin: KBN-5-NP (equivalent to NA12, 1069LA)

INCLUDED ACCESSORIES

34-9 matching thimble strike
10-24 machine thread bolt extender for varying gaps between bypassing doors
10-24 machine thread strike locator

▶ **329R** Showcase/Ratchet Lock



Item	Finish	Keying
329R	26D	KD, KA 101,103,107,915 Custom Keyed

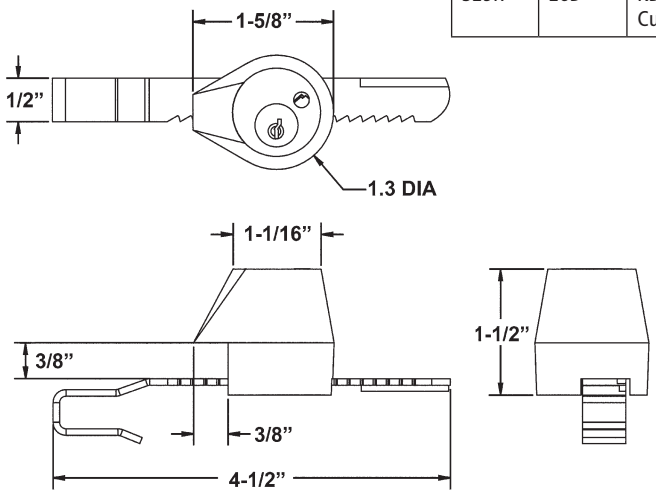

SPECIFICATIONS

Keying: Can be keyed together with other N Series locks
Rekeyable: Easily rekeyable via speed-release cylinder release mechanism
US Patent No: 5,121,619
Standard function: Key removable in locked or unlocked position.
Body: Zinc die cast
Cylinder: Solid brass, pin tumbler
Strap: Nylon coated strap fits 1/4" material
Finish: 26D
Packaged: Packed 10 per box

KEYING INFORMATION

Keyway: N Series (equivalent to National D4291 4-pin or D4292 5-pin system)
Keys: Includes 2 keys per lock
Stock keying: KD/KA - 4 pin standard
Stock KA#: 101, 103, 107, 915
Masterkeyed: 5 pin standard
Grand masterkeyed: Available
Keyblank 4-pin: KBN-4-NP (equivalent to NA14, 1069L)
Keyblank 5-pin: KBN-5-NP (equivalent to NA12, 1069LA)

INCLUDED ACCESSORIES

Strap for 1/4" material thickness

The following warning is applicable to all parts listed on this page:
WARNING: This product can expose you to chemicals including chromium, which is known to the State of California to cause cancer and birth defects or other reproductive harm. for more information go to www.P65Warnings.ca.gov.

▶ **L20V** Heavy Duty Latch Lock



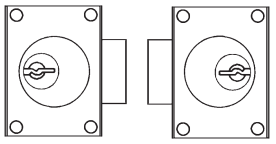

Item	Function	Finish	Cyl. Length	Keying
L20V	VH Drawer	26D	15/16" or 1-3/8"	KD, KA 101, 103, 107, 915 Custom Keyed
For door function, turn lock 90 degrees.				

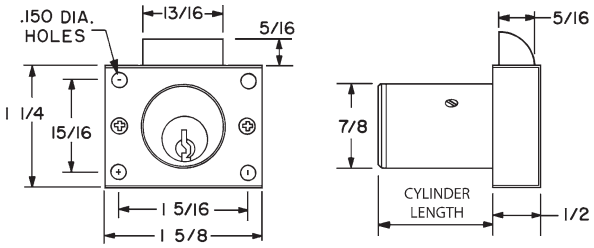

SPECIFICATIONS

Function: Heavy duty spring latch
Keying: Can be keyed together with other N Series locks
Function: Heavy duty spring latch for high-use applications
Rekeyable: Easily rekeyable via set screw cylinder release mechanism
US Patent Nos: 4,899,563; 4,920,774
Body: Zinc die cast
Cylinder: Solid brass, pin tumbler
Cylinder length: 15/16" or 1-3/8"
Barrel diameter: 7/8"
Latch projection: 5/16"
Finish: 26D
Packaged: Packed 10 per box

KEYING INFORMATION

Keyway: N Series (equivalent to National D4291 4-pin or D4292 5-pin system)
Keys: Includes 2 keys per lock
Stock keying: KD/KA - 4 pin standard
Stock KA#: 101, 103, 107, 915
Masterkeyed: 5 pin standard
Grand masterkeyed: Available
Keyblank 4-pin: KBN-4-NP (equivalent to NA14, 1069L)
Keyblank 5-pin: KBN-5-NP (equivalent to NA12, 1069LA)

INCLUDED ACCESSORIES

Strike: 999-STRIKE (slotted lip strike)

OPTIONAL ACCESSORIES

See the accessories section of this catalog for a complete list.

Spacers: WP20 (3/16" thick), WP21 (3/32" thick), WP22 (1/4" thick), WP23 (1/2" thick)
Strikes: 07S, 12-1, 12-2, 12-3, 12-4, 56-1
Trim ring: TR1256
Through-bolt hardware: ETS2 trim plate, ETS2-PL trim pull and ETST2 template

The following warning is applicable to all parts listed on this page:
WARNING: This product can expose you to chemicals including chromium, which is known to the State of California to cause cancer and birth defects or other reproductive harm. for more information go to www.P65Warnings.ca.gov.

Tel: 206.362.3290 | 800.525.0954
Fax 206.362.3569 | www.olympuslock.com

▶ 998 | 999 Latch Lock



998V



998I



999R



999L

SPECIFICATIONS

Function: Spring latch
Keying: Can be keyed together with other N Series locks
Reversible: Easily reversible between door and drawer function
Rekeyable: Easily rekeyable via set screw cylinder release mechanism
US Patent Nos: 4,899,563; 7,874,189 B2
Body: Zinc die cast
Cylinder: Solid brass, pin tumbler
Cylinder length: 15/16" or 1-3/8"
Barrel diameter: 7/8"
Latch projection: 1/4"
Finish: 26D
Packaged: Packed 10 per box

KEYING INFORMATION

Keyway: N Series (equivalent to National D4291 4-pin or D4292 5-pin system)
Keys: Includes 2 keys per lock
Stock keying: KD/KA - 4 pin standard
Stock KA#: 101, 103, 107, 915
Masterkeyed: 5 pin standard
Grand masterkeyed: Available
Keyblank 4-pin: KBN-4-NP (equivalent to NA14, 1069L)
Keyblank 5-pin: KBN-5-NP (equivalent to NA12, 1069LA)

INCLUDED ACCESSORIES

Strike: 999-STRIKE (slotted lip strike)

OPTIONAL ACCESSORIES

See the accessories section of this catalog for a complete list.

Spacer: WP24 (1/8" thick)
Trim ring: TR1256

FIELD REVERSIBLE INTO ALL FOUR HANDINGS

Item	Function	Finish	Cyl. Length	Keying
999R	RH Door	26D	15/16" or 1-3/8"	KD, KA 101, 103, 107, 915 Custom Keyed
999L	LH Door	26D	15/16" or 1-3/8"	
998V	VH Drawer	26D	15/16" or 1-3/8"	
998I	IH Drawer	26D	15/16" or 1-3/8"	
Field reversible: Locks are easily reconfigured in the field into any of the four handings.				

999L LEFT HAND

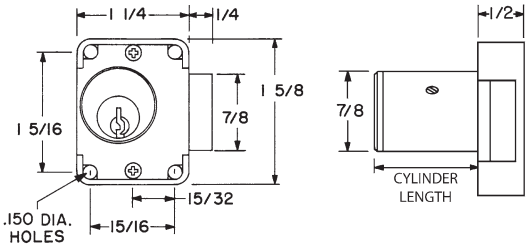

999R RIGHT HAND

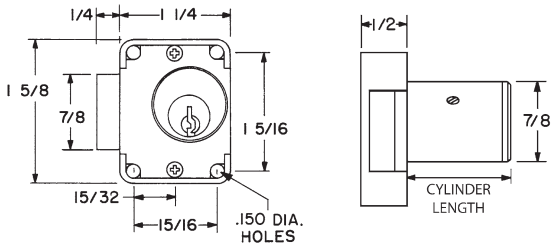

998V VERTICAL HAND

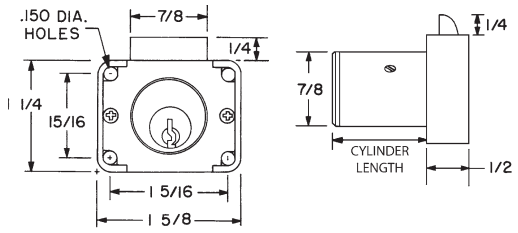

998I INVERTED HAND

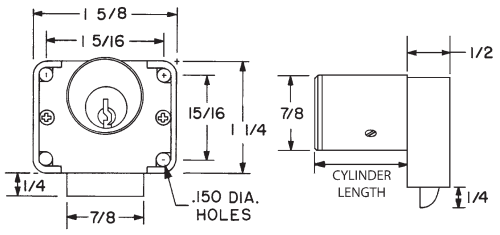

The following warning is applicable to all parts listed on this page:
WARNING: This product can expose you to chemicals including chromium, which is known to the State of California to cause cancer and birth defects or other reproductive harm. for more information go to www.P65Warnings.ca.gov.

▶ **T37** T-Bolt Drawer Lock



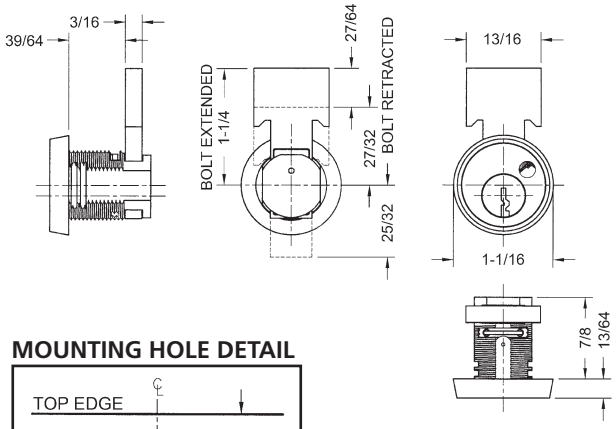

DRAWER DETAIL

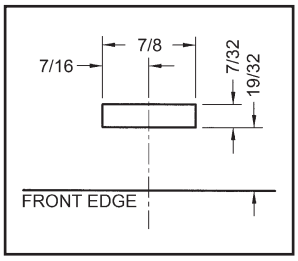

MOUNTING HOLE DETAIL

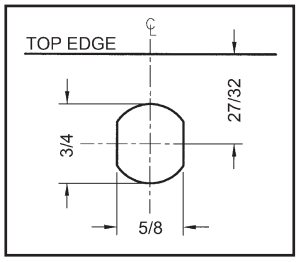

Item	Finish	Cyl. Length	For Material	Keying
T37	26D	19/32"	1/4"	KA* or KD (4-pin) Custom, master keyed (4-pin)
T37-2 T37-3 T37-RC T37-NKIT T37DC-NP	Long bolt Short bolt (Chicago-style) for 25/32" backset Spring mounting clip Number plate kit Replacement number plate only			
***KA Nos:** 101,103,107,915 51001 through 51011 001 through 030 Other non-stock codes available through custom keying.				

SPECIFICATIONS

Keying: Can be keyed together with other N Series locks
Rekeyable: Working top-slide, cylinder retainer staple and removable bezel ring make rekeying fast and easy. No more need to pry off faceplates and pin retainer clips.
US Patent No: 5,038,589
Standard function: Key removable in locked or unlocked position.
Retrofits: National C8137
Body: Zinc die cast
Cylinder: Zinc die cast, pin tumbler
Bolt: Stainless steel
Includes: Brass mounting nut. Spring mounting clip T37-RC is available separately.
Barrel diameter: 3/4"
Across flats: 5/8"
Finish: 26D
Packaged: Packed 10 per box

KEYING INFORMATION

Keyway: N Series (equivalent to National D4291 4-pin system)
Keys: Includes 2 keys per lock
Stock keying: KD/KA - 4 pin standard
Stock KA#: 101, 103, 107, 915
51001 through 51011
001 through 030
Masterkeyed: 4 pin standard
Keyblank 4-pin: KBN-4-NP
(equivalent to NA14, 1069L)

SPECIAL NOTE ON BOLTS ONLY

The T37-1 (regular bolt) , T37-2 (long bolt) and T37-3 (short bolt) will not work in the National C8137 lock. However, the C8137 bolts will work in the T37 lock.

OPTIONAL ACCESSORIES

See below.

OPTIONAL ACCESSORIES



T37-RC
Spring mounting clip

The lock comes standard with clip mounting locations up to 11/64" material thicknesses.

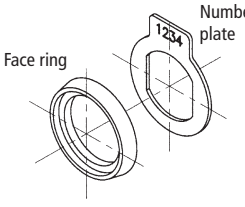

T37-NKIT
Number plate kit elminates need to stamp face of lock

Replacement number plates also available separately (Use part no. T37DC-NP).

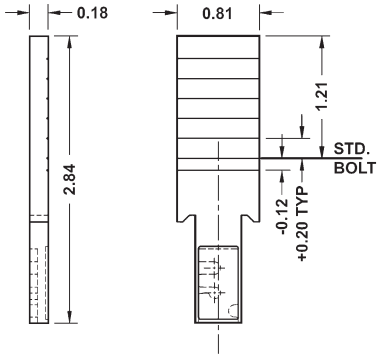

T37-2
Long bolt can be cut to length required by application

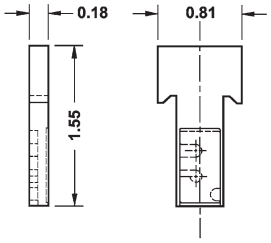

T37-3
Short bolt for 25/32" backset

The following warning is applicable to all parts listed on this page:
WARNING: This product can expose you to chemicals including chromium, which is known to the State of California to cause cancer and birth defects or other reproductive harm. for more information go to www.P65Warnings.ca.gov.

Tel: 206.362.3290 | 800.525.0954
Fax 206.362.3569 | www.olympuslock.com

▶ **T54C** T-Knob Cylinder Replacement Kit

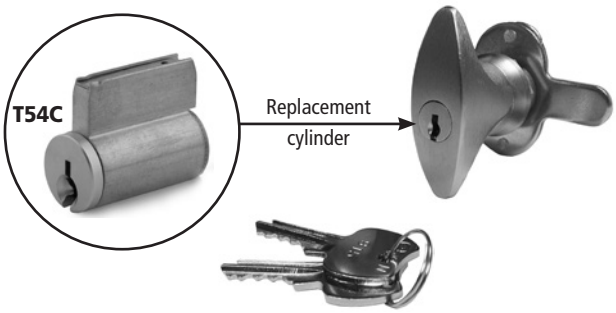

Item	Finish	Type	Use with	Keying
T54C	26D	Replacement cylinder	CompX/National C8154 or C8155	Ships standard with empty chambers and 2 ringed 4-pin keyblanks. KD, KA or MK available.

Usage: T54C T-Knob Cylinder Replacement Kit replaces original CompX/National T-knob pin tumbler cylinders. No need to replace the entire t-knob lock, just replace the non-functioning cylinder. Cylinder is all brass construction for increased durability. This 5-pin cylinder can be keyed to match existing 4-pin or 5-pin systems. T54C replacement cylinder works with all CompX/National pin-tumbler t-knob locks regardless of handing or key operation (key removable in locked or unlocked position) or latch configuration. ***Can be keyed to match our T37 Series locks (see previous page) or any of our N Series products.***

SPECIFICATIONS

Keying: Can be keyed together with other N Series locks
Rekeyable: Includes working top-slide for easy rekeying
Replaces: CompX/National original cylinder for C8154 or C8155 pin tumbler t-knob locks for metal cabinet doors.
Cylinder: Drilled for 5 pins. Can be keyed to match existing 4-pin or 5-pin systems.
Material: Solid brass
Finish: 26D
Packaged: Packed 25 per box

KEYING INFORMATION

Keyway: N Series (equivalent to National D4291 4-pin or D4292 5-pin system)
Keying: Can be keyed to match National 4 or 5 pin key systems
Includes: Plug and housing, no pins or springs and 2 ringed KBN-4-NP (4-pin) keyblanks
Custom keying: Available
Keyblank 4-pin: KBN-4-NP (equivalent to NA14, 1069L)
Keyblank 5-pin: KBN-5-NP (equivalent to NA12, 1069LA)

▶ **FC10** File Cabinet Lock Kit





Item	Finish	Keying
FC10	26D	KD, KA 101,103,107,915 Custom, master keyed
T37-NKIT T37DC-NP	Number plate kit Replacement number plate only	

SPECIFICATIONS

Keying: Can be keyed together with other N Series locks
Rekeyable: Working top-slide, cylinder retainer staple and removable bezel ring make rekeying fast and easy
Retrofit: Replacement for HON F24/F28 style vertical file cabinet locks
U.S. Patent Nos: 5,038,589; 5,737,950
Standard function: Key removable in locked or unlocked position.
Body: Zinc die cast
Cylinder: Zinc die cast, pin tumbler
Includes: Brass mounting nut
Barrel diameter: 3/4"
Across flats: 5/8"
Finish: 26D
Packaged: Packed 10 per box

KEYING INFORMATION

Keyway: N Series (equivalent to National D4291 4-pin or D4292 5-pin system)
Keys: Includes 2 keys per lock
Stock keying: KD/KA - 4 pin standard
Stock KA#: 101, 103, 107, 915
Masterkeyed: 5 pin standard
Grand masterkeyed: Available
Keyblank 4-pin: KBN-4-NP (equivalent to NA14, 1069L)
Keyblank 5-pin: KBN-5-NP (equivalent to NA12, 1069LA)

OPTIONAL ACCESSORIES

T37-NKIT: Number plate kit, eliminates need to stamp face of lock (page 84)
T37DC-NP: Replacement number ring plates available (page 84)

FC26-AR Adapter Ring

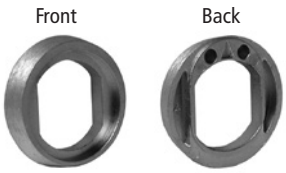

Item	Finish	Description
FC26-AR	26D	Adapter ring converts FC10 to work as a replacement for HON F26 style lock.

SPECIFICATIONS

Retrofit: Converts the Olympus FC10 file cabinet lock so it can be used as a replacement for a HON F26 style vertical file cabinet lock.
Usage: Use the FC26-AR adapter ring in place of the bezel ring that comes standard with the FC10.
Installation: Install trim collar with arrow on back facing top of cabinet.

The following warning is applicable to all parts listed on this page:
WARNING: This product can expose you to chemicals including chromium, which is known to the State of California to cause cancer and birth defects or other reproductive harm. for more information go to www.P65Warnings.ca.gov.

▶ **N078** Drawer Lock



N078
DRAWER

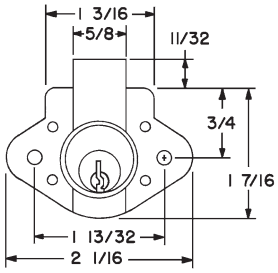

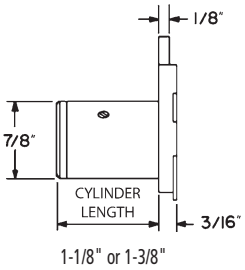

1-1/8" or 1-3/8"

Item	Function	Finish	Cyl. Length	Keying
N078	VH Drawer	26D, US4	1-1/8" or 1-3/8"	KD, KA 101,103,107,915 Custom Keyed
Outbent bolt installed:		Specify **LB1** for 1/2" offset outbent drawer bolt installed in lock.		
Outbent bolt only:		Order part number **078-LB1-DW** for outbent drawer bolt only.		

OPTIONAL OFFSET BOLT



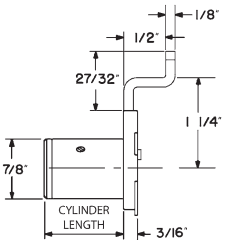

▶ **N078L | N078R** Door Lock



N078L
LH DOOR



N078R
RH DOOR

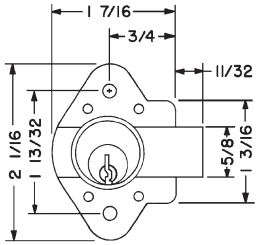

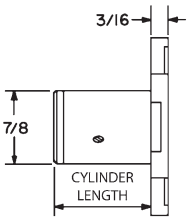

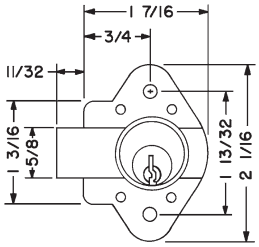

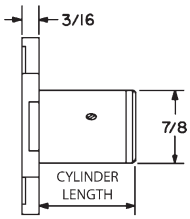

Item	Function	Finish	Cyl. Length	Keying
N078R	RH Door	26D	1-1/8" or 1-3/8"	KD, KA 101,103,107,915 Custom Keyed
N078L	LH Door	26D	1-1/8" or 1-3/8"	
Long bolt installed:		Specify **LB** for extended door bolt installed in lock.		
Long bolt only:		Order part number **078-LB-DR** for extended door for bolt only.		

NOTE: N078R / N078L are reversible between left and right handings.

OPTIONAL LONG BOLT

Extends overall bolt length by an additional 1/8". Reversible for use with LH or RH locks.

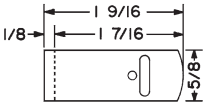

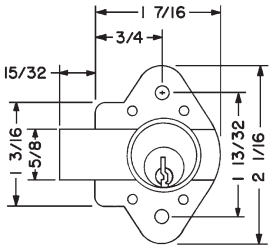

SPECIFICATIONS

Keying: Can be keyed together with other N Series locks
Rekeyable: Easily rekeyable via set screw cylinder release mechanism
US Patent Nos: 4,899,563; 4,920,774
Standard function: Key removable in locked or unlocked position.
Door locks: Can be reversed between left and right hand.
Body: Zinc die cast
Cylinder: Solid brass, pin tumbler
Cylinder length: 1-1/8" or 1-3/8"
Barrel diameter: 7/8"
Finish: 26D (door or drawer) or US4 (drawer only)
Packaged: Packed 10 per box

KEYING INFORMATION

Keyway: N Series (equivalent to National D4291 4-pin or D4292 5-pin system)
Keys: Includes 2 keys per lock
Stock keying: KD/KA - 4 pin standard
Stock KA#: 101, 103, 107, 915
Masterkeyed: 5 pin standard
Grand masterkeyed: Available
Keyblank 4-pin: KBN-4-NP (equivalent to NA14, 1069L)
Keyblank 5-pin: KBN-5-NP (equivalent to NA12, 1069LA)

OPTIONAL ACCESSORIES

See the accessories section of this catalog for a complete list.

Spacers: WP20 (3/16" thick), WP21 (3/32" thick), WP22 (1/4" thick), WP23 (1/2" thick)
Strikes: 07S, 56-1, 12-1, 12-2, 12-3, 12-4 strikes
Trim ring: TR1256
Optional drawer bolt: 078-LB1-DW long bolt with 1/2" offset (drawer only)
Optional door bolt: 078-LB-DR 1/4" straight long bolt (door only)

The following warning is applicable to all parts listed on this page:
WARNING: This product can expose you to chemicals including chromium, which is known to the State of California to cause cancer and birth defects or other reproductive harm. for more information go to www.P65Warnings.ca.gov.

Tel: 206.362.3290 | 800.525.0954
Fax 206.362.3569 | www.olympuslock.com

▶ 500DR | 500B | 500M Door Lock



ANSI/BHMA
A156.11 Grade 1
E07121

Woodwork Institute (WI) acknowledged product

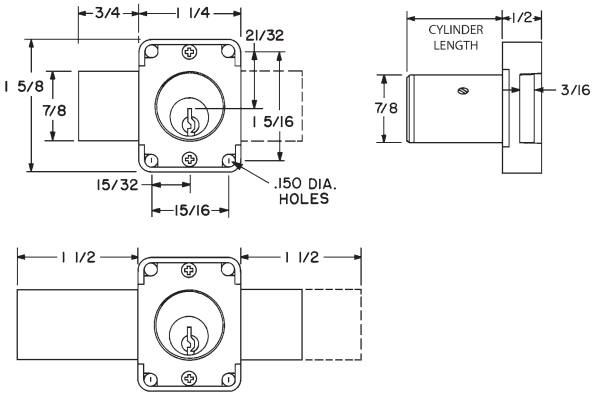

LB: Long bolt option

500DR

Function: Standard function lock
Includes: 2 keys, 56-1 bar strike, and lock mounting screws

500B - Weather Resistant

Function: Weather resistant construction. Suitable for outdoor use in covered areas only.
Includes: 2 keys, 56-1 bar strike, and lock mounting screws

500M - MRI Function

Function: MRI locks are made of all non-magnetic materials and components specifically for use in MRI medical applications.
Includes: 2 keys, 56-1 bar strike, and lock mounting screws (keys, components and materials are non-ferrous/non-magnetic)

500DR

Item	Function	Finish	Cyl. Length	Keying
500DR	Door	26D, US4, 10B	15/16"	KD, KA 4T21579, 4T37526 Custom Keyed
500DR	Door	26D, US4	1-3/8"	
Key-retaining:		Specify item **500KL** for left-hand doors and **500KR** for right-hand doors. (**KL** and **KR** designation are *only required for key retaining locks*).		
Long bolt:		Specify **LB** for long bolt installed in lock.		

500B - B Series (Weather Resistant)

Item	Function	Finish	Cyl. Length	Keying
500B	Door	26D, US4, 10B	15/16"	KD, KA 4T21579, 4T37526 Custom Keyed
500B	Door	26D, US4	1-3/8"	
Key-retaining:		Specify item **500BKL** for left-hand doors and **500BKR** for right-hand doors. (**BKL** and **BKR** designation are *only required for key retaining B Series locks*).		
Long bolt:		Specify **LB** for long bolt installed in lock.		

500M - MRI Function (Non-Magnetic)

Item	Function	Finish	Cyl. Length	Keying
500M	Door	26D	15/16" or 1-3/8"	KD, KA 4T21579, 4T37526 Custom Keyed
Key-retaining (MRI):		Specify item **500MKL** for left-hand doors and **500MKR** for right-hand doors. (**MKL** and **MKR** designation are *only required for key retaining MRI locks*).		
Long bolt:		Specify **LB** for long bolt installed in lock.		

SPECIFICATIONS

Keying: Can be keyed together with other R Series locks
Rekeyable: Easily rekeyable via set screw cylinder release mechanism
ANSI/BHMA: Passed ANSI/BHMA A156.11 Grade 1 performance requirements. Equivalent to E07121(500DR) / E07041(600DW).
Standard function: Key removable in locked or unlocked position. Standard function locks are non-handed.
Key-retaining: Key removable in locked position only. Specify handing (KL/KR for doors or KI/KV for drawers) when ordering.
US Patent Nos: 4,899,563; 4,920,774
Body: Zinc die cast
Cylinder: Solid brass, pin tumbler
Cylinder length: 15/16" or 1-3/8"
Barrel diameter: 7/8"
Finish: 26D, US4 or 10B
Packaged: Packed 10 per box

KEYING INFORMATION

Keyway: R Series (equivalent to CCL R1 system)
Keys: Includes 2 keys per lock
Stock keying: KD/KA - 5 pin standard
Stock KA#: 4T21579, 4T37526
Masterkeyed: 5 pin standard, 6 pin available
Grand masterkeyed: Available
Keyblank 5-pin: KBR-5-NP (equivalent to CO106, 1003A)
Keyblank 5-pin copper plated: KBR-5B (use with M Series MRI locks)
Keyblank 6-pin: KBR-6-NP (equivalent to L1003A)

INCLUDED ACCESSORIES

500DR/500B: 2 keys, 56-1 bar strike, and lock mounting screws
500M: 2 keys, 56-1 bar strike, and lock mounting screws (keys, components and materials are non-ferrous/non-magnetic)

OPTIONAL ACCESSORIES

See the accessories section of this catalog for a complete list.

Spacers: WP20 (3/16" thick), WP21 (3/32" thick), WP22 (1/4" thick), WP23 (1/2" thick)
Strikes: 07S, 12-1, 12-2, 12-3, 12-4, 56-1 strikes
Trim ring: TR1256
Through-bolt hardware: ETS2 trim plate, ETS2-PL trim pull and ETST2 template
Long bolt (bolt only): 15-1-35 for use with 500DR/500B/500M locks

The following warning is applicable to all parts listed on this page:
WARNING: This product can expose you to chemicals including chromium, which is known to the State of California to cause cancer and birth defects or other reproductive harm. for more information go to www.P65Warnings.ca.gov.

▶ 600DW | 600B | 600M Drawer Lock



ANSI/BHMA A156.11 Grade 1 E07041

Woodwork Institute (WI) acknowledged product

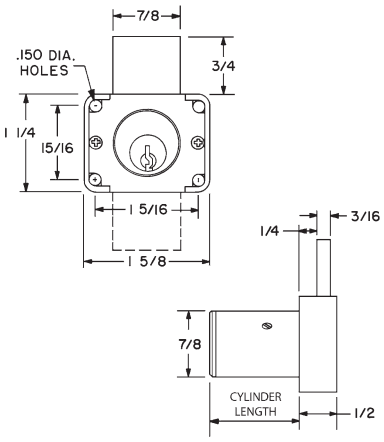

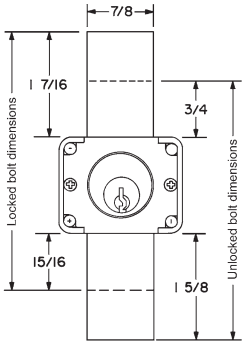

LB: Long bolt option

600DW

Function: Standard function lock
Includes: 2 keys, 12-3 bar strike, and lock mounting screws

600B - Weather Resistant

Function: Weather resistant construction. Suitable for outdoor use in covered areas only.
Includes: 2 keys, 12-3 bar strike, and lock mounting screws

600M - MRI Function

Function: MRI locks are made of all non-magnetic materials and components specifically for use in MRI medical applications.
Includes: 2 keys, 56-1 bar strike, and lock mounting screws (keys, components and materials are non-ferrous/non-magnetic)

600DW

Item	Function	Finish	Cyl. Length	Keying
600DW	Drawer	26D, US4, 10B	15/16" or 1-3/8"	KD, KA 4T21579, 4T37526 Custom Keyed
Key-retaining:		Specify item **600KI** for inverted drawers and **600KV** for vertical drawers. (**KI** and **KV** designations are *only required for key retaining locks*).		
Long bolt:		Specify **LB** for long bolt installed in lock.		

600B - B Series (Weather Resistant)

Item	Function	Finish	Cyl. Length	Keying
600B	Drawer	26D, US4, 10B	15/16" or 1-3/8"	KD, KA 4T21579, 4T37526 Custom Keyed
Key-retaining:		Specify item **600BKI** for inverted drawers and **600BKV** for vertical drawers. (**BKI** and **BKV** designations are *only required for key retaining locks*).		
Long bolt:		Specify **LB** for long bolt installed in lock.		

600M - MRI Function (Non-Magnetic)

Item	Function	Finish	Cyl. Length	Keying
600M	Drawer	26D	15/16" or 1-3/8"	KD, KA 4T21579, 4T37526 Custom Keyed
Key-retaining (MRI):		Specify item **600MKI** for inverted drawers and **600MKV** for vertical drawers. (**MKI** and **MKV** designations are *only required for key retaining MRI locks*).		
Long bolt:		Specify **LB** for long bolt installed in lock.		

SPECIFICATIONS

Keying: Can be keyed together with other R Series locks
Rekeyable: Easily rekeyable via set screw cylinder release mechanism
ANSI/BHMA: Passed ANSI/BHMA A156.11 Grade 1 performance requirements. Equivalent to E07121(500DR) / E07041(600DW).
Standard function: Key removable in locked or unlocked position. Standard function locks are non-handed.
Key-retaining: Key removable in locked position only. Specify handing (KL/KR for doors or KI/KV for drawers) when ordering.
US Patent Nos: 4,899,563; 4,920,774
Body: Zinc die cast
Cylinder: Solid brass, pin tumbler
Cylinder length: 15/16" or 1-3/8"
Barrel diameter: 7/8"
Finish: 26D, US4 or 10B
Packaged: Packed 10 per box

KEYING INFORMATION

Keyway: R Series (equivalent to CCL R1 system)
Keys: Includes 2 keys per lock
Stock keying: KD/KA - 5 pin standard
Stock KA#: 4T21579, 4T37526
Masterkeyed: 5 pin standard, 6 pin available
Grand masterkeyed: Available
Keyblank 5-pin: KBR-5-NP (equivalent to CO106, 1003A)
Keyblank 5-pin copper plated: KBR-5B (use with M Series MRI locks)
Keyblank 6-pin: KBR-6-NP (equivalent to L1003A)

INCLUDED ACCESSORIES

600DW/600B: 2 keys, 12-3 angle strike, and lock mounting screws
600M: 2 keys, 56-1 bar strike, and lock mounting screws (keys, components and materials are non-ferrous/non-magnetic)

OPTIONAL ACCESSORIES

See the accessories section of this catalog for a complete list.

Spacers: WP20 (3/16" thick), WP21 (3/32" thick), WP22 (1/4" thick), WP23 (1/2" thick)
Strikes: 07S, 12-1, 12-2, 12-3, 12-4, 56-1 strikes
Trim ring: TR1256
Through-bolt hardware: ETS2 trim plate, ETS2-PL trim pull and ETST2 template
Long bolt (bolt only): 15-1-35 for use with 600DW/600B/600M locks

The following warning is applicable to all parts listed on this page:
WARNING: This product can expose you to chemicals including chromium, which is known to the State of California to cause cancer and birth defects or other reproductive harm. for more information go to www.P65Warnings.ca.gov.

Tel: 206.362.3290 | 800.525.0954
Fax 206.362.3569 | www.olympuslock.com

▶ **DCR** Cam Lock



Locks in all eight positions with 2 reversible cams



ANSI/BHMA A156.11 Grade 1 E07261 / E07271

Woodwork Institute (WI) acknowledged product

Mounting Cutout

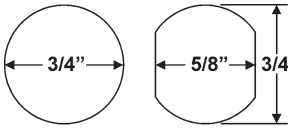

Item	Finish	Cyl. Length	Keying
DCR1	26D, US3	1-1/16"	KD, KA 4T21579, 4T37526 Custom Keyed
DCR2	26D, US3	1-3/16"	
DCR3	26D, US3	1-7/16"	
DCR4	26D, US3	1-3/4"	
Cylinder length: As measured with straight cam.			

DIMENSIONS

	For Mat. Thickness	Straight Cam (X)	Inbent Cam (Y)	Outbent Cam (Z)	Cylinder Length (A)
DCR1	3/4"	1-1/16"	3/4"	1-3/8"	1"
DCR2	7/8"	1-3/16"	7/8"	1-1/2"	1-1/8"
DCR3	1-1/8"	1-7/16"	1-1/8"	1-3/4"	1-3/8"
DCR4	1-1/2"	1-13/16"	1-1/2"	2-1/8"	1-3/4"

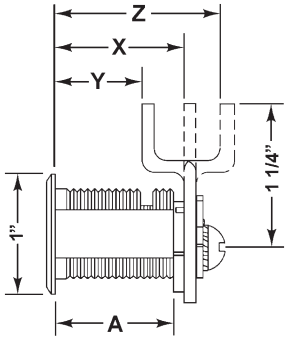

SPECIFICATIONS

Keying: Can be keyed together with other R Series locks
Rekeyable: Easily rekeyable via cylinder retainer clip
ANSI/BHMA: Passed ANSI/BHMA A156.11 Grade 1 performance requirements. Equivalent to E07261 / E07271.
US Patent Nos: 5,038,589; 5,737,950
Body: Zinc die cast
Cylinder: Zinc die cast, pin tumbler
Standard function: Key removable in locked or unlocked position.
Key retaining function: Alternate key-retaining shifters (page 79) are available separately for key removable in locked position only.
Cams: 2 reversible cams work in all positions
Face: 1" face covers splintering, no additional trim ring required
Finish: 26D or US3
Packaged: Packed 10 per box

KEYING INFORMATION

Keyway: R Series (equivalent to CCL R1 system)
Keys: Includes 2 keys per lock
Stock keying: KD/KA - 5 pin standard
Stock KA#: 4T21579, 4T37526
Masterkeyed: 5 pin standard
Grand masterkeyed: Available
Keyblank 5-pin: KBR-5-NP (equivalent to CO106, 1003A)

INCLUDED ACCESSORIES

See below.

OPTIONAL ACCESSORIES

See pages 83-84 for a complete list of optional cam sizes and other accessories for use with DCR cam locks.

DCNP-200-KR: Key retaining drawer cam shifter
DCNP-200-KDR: Key retaining door cam shifter

INCLUDED ACCESSORIES

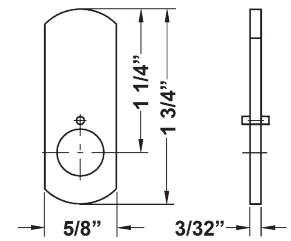

DCNP-100-SC
straight cam

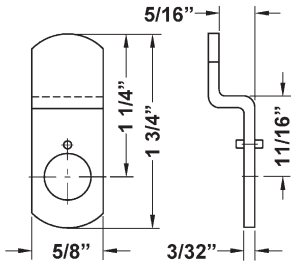

DCNP-100-BC
offset reversible cam

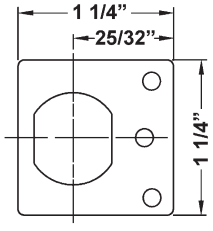

DCNP-500-ARP
anti-rotation plate



DCNP-200-OCD
lost-motion cam shifter

The following warning is applicable to all parts listed on this page:
WARNING: This product can expose you to chemicals including chromium, which is known to the State of California to cause cancer and birth defects or other reproductive harm. for more information go to www.P65Warnings.ca.gov.

▶ **400SD** Plunger Lock

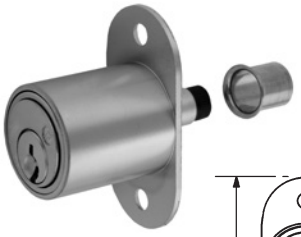

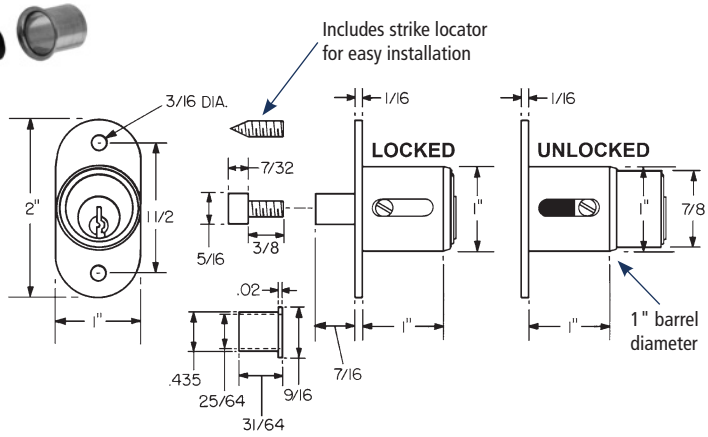

Max. bolt projection using optional threaded bolt extender is 27/32"

Item	Finish	Cyl. Length	Keying
400SD	26D, US3, 10B	1"	KD, KA 4T21579, 4T37526 Custom Keyed

SPECIFICATIONS

Keying: Can be keyed together with other R Series locks
Rekeyable: Easily rekeyable via speed-release cylinder release mechanism
US Patent Nos: 4,920,774; 5,121,619
Standard function: Key removable in locked or unlocked position.
Body: Zinc die cast
Cylinder: Solid brass, pin tumbler
Cylinder length: 1"
Barrel diameter: 1"
Finish: 26D, US3 or 10B
Packaged: Packed 10 per box

KEYING INFORMATION

Keyway: R Series (equivalent to CCL R1 system)
Keys: Includes 2 keys per lock
Stock keying: KD/KA - 5 pin standard
Stock KA#: 4T21579, 4T37526
Masterkeyed: 5 pin standard
Grand masterkeyed: Available
Keyblank 5-pin: KBR-5-NP (equivalent to CO106, 1003A)

INCLUDED ACCESSORIES

34-9 matching thimble strike
10-24 machine thread bolt extender for varying gaps between bypassing doors
10-24 machine thread strike locator

▶ **429R** Showcase/Ratchet Lock



Item	Finish	Keying
429R	26D	KD, KA 4T21579, 4T37526 Custom Keyed

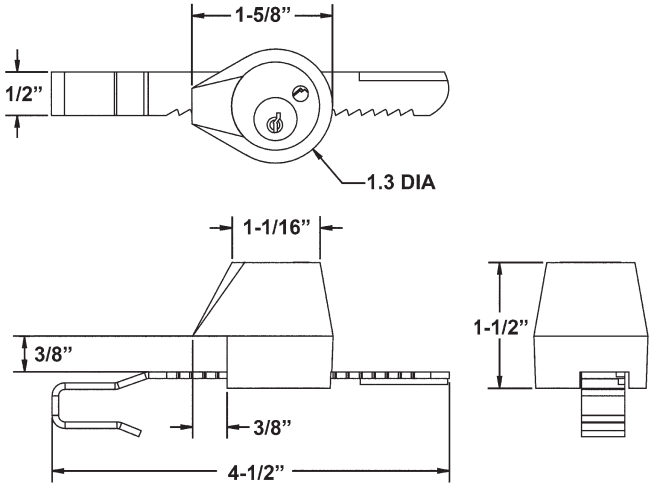

SPECIFICATIONS

Keying: Can be keyed together with other R Series locks
Rekeyable: Easily rekeyable via speed-release cylinder release mechanism
US Patent No: 5,121,619
Body: Zinc die cast
Cylinder: Solid brass, pin tumbler
Strap: Nylon coated strap fits 1/4" material
Finish: 26D
Packaged: Packed 10 per box

KEYING INFORMATION

Keyway: R Series (equivalent to CCL R1 system)
Stock keying: KD/KA - 5 pin standard
Stock KA#: 4T21579, 4T37526
Masterkeyed: 5 pin standard
Grand masterkeyed: Available
Keyblank 5-pin: KBR-5-NP (equivalent to CO106, 1003A)

INCLUDED ACCESSORIES

Strap for 1/4" material thickness

The following warning is applicable to all parts listed on this page:
WARNING: This product can expose you to chemicals including chromium, which is known to the State of California to cause cancer and birth defects or other reproductive harm. for more information go to www.P65Warnings.ca.gov.

Tel: 206.362.3290 | 800.525.0954
Fax 206.362.3569 | www.olympuslock.com

▶ **R078** Deadbolt Lock



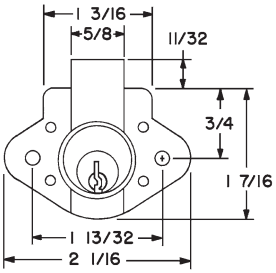

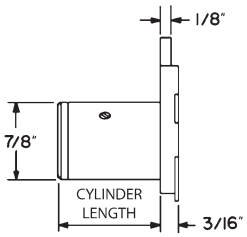

Item	Function	Finish	Cyl. Length	Keying
R078	VH Drawer	26D, US4	1-1/8"	KD, KA 4T21579, 4T37526 Custom Keyed
Outbent bolt installed:		Specify **LB1** for 1/2" offset outbent drawer bolt installed in lock.		
Outbent bolt only:		Order part number **078-LB1-DW** for outbent drawer bolt only.		

OPTIONAL OFFSET BOLT



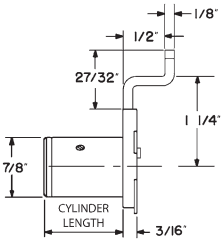

SPECIFICATIONS

Keying: Can be keyed together with other R Series locks
Rekeyable: Easily rekeyable via set screw cylinder release mechanism
US Patent Nos: 4,899,563; 4,920,774
Body: Zinc die cast
Cylinder: Solid brass, pin tumbler
Cylinder length: 1-1/8"
Barrel diameter: 7/8"
Finish: 26D or US4
Packaged: Packed 10 per box

KEYING INFORMATION

Keyway: R Series (equivalent to CCL R1 system)
Keys: Includes 2 keys per lock
Stock keying: KD/KA - 5 pin standard
Stock KA#: 4T21579, 4T37526
Masterkeyed: 5 pin standard
Grand masterkeyed: Available
Keyblank 5-pin: KBR-5-NP (equivalent to CO106, 1003A)

OPTIONAL ACCESSORIES

See the accessories section of this catalog for a complete list.

Spacers: WP20 (3/16" thick), WP21 (3/32" thick), WP22 (1/4" thick), WP23 (1/2" thick)
Strikes: 07S, 56-1, 12-1, 12-2, 12-3, 12-4 strikes
Trim ring: TR1256
Optional bolt: 078-LB1-DW optional 1/2" outbent drawer bolt

The following warning is applicable to all parts listed on this page:
WARNING: This product can expose you to chemicals including chromium, which is known to the State of California to cause cancer and birth defects or other reproductive harm. for more information go to www.P65Warnings.ca.gov.

▶ 996 | 997 Latch Lock

Field reversible into all four handings!



996V



996I



997R



997L

SPECIFICATIONS

Function: Spring latch
Keying: Can be keyed together with other R Series locks
Reversible: Easily reversible between door and drawer function
Rekeyable: Easily rekeyable via set screw cylinder release mechanism
US Patent Nos: 4,899,563; 7,874,189 B2
Body: Zinc die cast
Cylinder: Solid brass, pin tumbler
Cylinder length: 15/16" or 1-3/8"
Barrel diameter: 7/8"
Latch projection: 1/4"
Finish: 26D
Packaged: Packed 10 per box

KEYING INFORMATION

Keyway: R Series (equivalent to CCL R1 system)
Keys: Includes 2 keys per lock
Stock keying: KD/KA - 5 pin standard
Stock KA#: 4T21579, 4T37526
Masterkeyed: 5 pin standard, 6 pin available
Grand masterkeyed: Available
Keyblank 5-pin: KBR-5-NP (equivalent to CO106, 1003A)
Keyblank 6-pin: KBR-6-NP (equivalent to L1003A)

INCLUDED ACCESSORIES

Strike: 999-STRIKE (slotted lip strike)

OPTIONAL ACCESSORIES

See the accessories section of this catalog for a complete list.

Spacer: WP24 (1/8" thick)
Trim ring: TR1256

FIELD REVERSIBLE INTO ALL FOUR HANDINGS

Item	Function	Finish	Cyl. Length	Keying
997R	RH Door	26D	15/16" or 1-3/8"	KD, KA 4T21579, 4T37526 Custom Keyed
997L	LH Door	26D	15/16" or 1-3/8"	
996V	VH Drawer	26D	15/16" or 1-3/8"	
996I	IH Drawer	26D	15/16" or 1-3/8"	
Field reversible: Locks are easily reconfigured in the field into any of the four handings.				

997L LEFT HAND

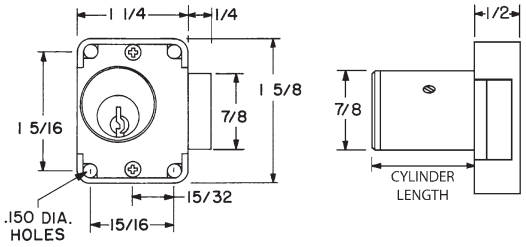

997R RIGHT HAND

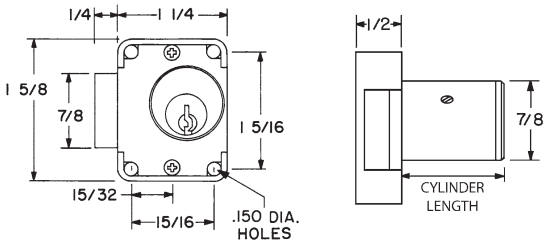

996V VERTICAL HAND

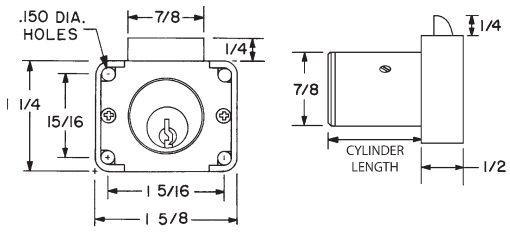

996I INVERTED HAND

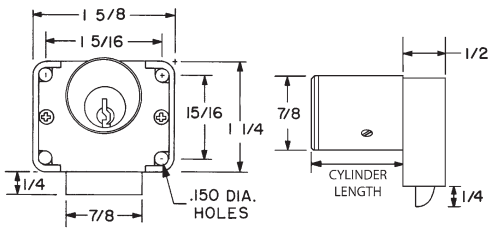

The following warning is applicable to all parts listed on this page:
WARNING: This product can expose you to chemicals including chromium, which is known to the State of California to cause cancer and birth defects or other reproductive harm. for more information go to www.P65Warnings.ca.gov.

Tel: 206.362.3290 | 800.525.0954
Fax 206.362.3569 | www.olympuslock.com

OLYMPUS® LOCK INC

▶ 754LC Door Lock

For SARGENT C480-2 (13-3457) deadbolt cylinder

Less cylinder locks

For SARGENT original deadbolt-style cylinders



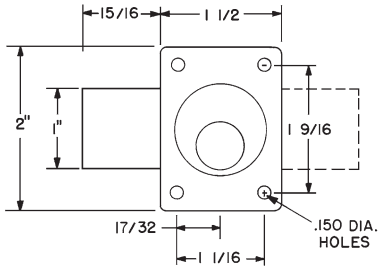

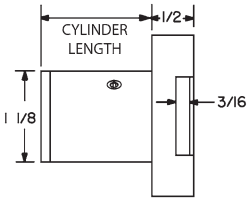

Woodwork Institute (WI) acknowledged product

Item	Finish	Cyl. Length	Description
754LC	26D	1-3/8"	Less Cylinder - For use with Sargent C480-2 (13-3457) deadbolt cylinder

SPECIFICATIONS

Rekeyable: Easily rekeyable via set-screw cylinder removal mechanism
US Patent Nos: 4,899,563; 4,920,774
Standard function: Key removable in locked or unlocked position. Standard function locks are non-handed.
Body: Zinc die cast
Cylinder length: 1-3/8"
Barrel diameter: 1-1/8"
Finish: 26D
Packaged: Packed 10 per box

CYLINDER INFORMATION

Cylinder: Not included
Accepts: Sargent C480-2 (13-3457) 6-pin deadbolt cylinder

INCLUDED ACCESSORIES

All parts to work with Sargent original cylinders
10-056 notched strike

OPTIONAL ACCESSORIES

See the accessories section of this catalog for a complete list.

Spacers: 10-350 (1/8" thick), 10-348 (1/4" thick), 10-349 (1/2" thick)
Strikes: 10-052, 10-054, 10-055, 10-057, 10-058, 12-2, 12-3, 12-4
Trim ring: TR78
Through-bolt hardware: ETS1 trim plate, ETS1-PL trim pull and ETST1 template

▶ 854LC Drawer Lock

For SARGENT C480-2 (13-3457) deadbolt cylinder

Less cylinder locks

For SARGENT original deadbolt-style cylinders



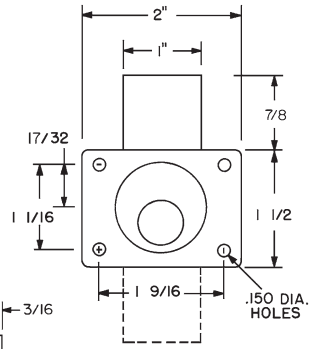

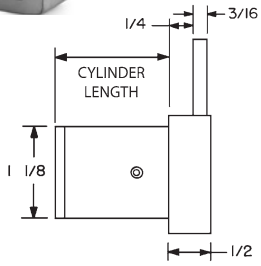

Woodwork Institute (WI) acknowledged product

Item	Finish	Cyl. Length	Description
854LC	26D	1-3/8"	Less Cylinder - For use with Sargent C480-2 (13-3457) deadbolt cylinder

See page 48 for Sargent interchangeable core locks



The following warning is applicable to all parts listed on this page:
WARNING: This product can expose you to chemicals including chromium, which is known to the State of California to cause cancer and birth defects or other reproductive harm. for more information go to www.P65Warnings.ca.gov.

▶ **700S** Door Lock



ANSI/BHMA A156.11 Grade 1 E07121

Woodwork Institute (WI) acknowledged product

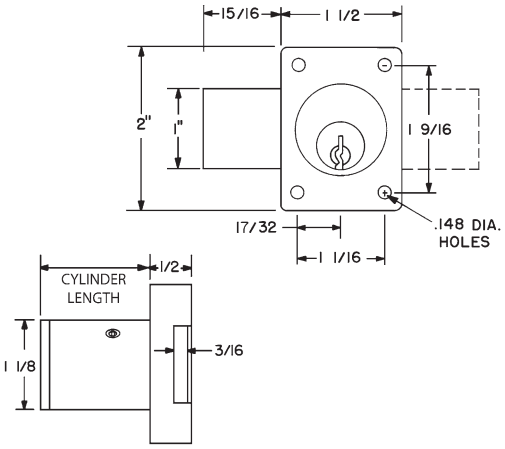

Item	Function	Finish	Cyl. Length	Keying
700S	Door	26D, US3, 10B	1-1/8" or 1-3/8"	KD, KA 101,102, O-Bit Custom Keyed
700KL	LH Door-KR	26D, US3, 10B	1-1/8" or 1-3/8"	
700KR	RH Door-KR	26D, US3, 10B	1-1/8" or 1-3/8"	
Key-retaining (KR): Specify item **700KL** for left-hand doors and **700KR** for right-hand doors. (**KL** and **KR** designation are *only required for key retaining locks*).				
10B finish: Not available on 700S 1-3/8", 700KL 1-3/8" or 700KR 1-3/8"				

▶ **800S** Drawer Lock



ANSI/BHMA A156.11 Grade 1 E07041

Woodwork Institute (WI) acknowledged product

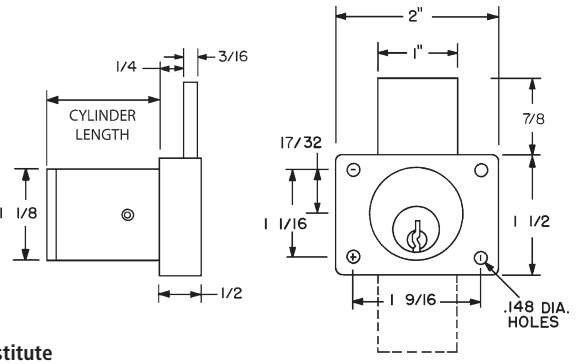

Item	Function	Finish	Cyl. Length	Keying
800S	Drawer	26D, US3, 10B	1-1/8" or 1-3/8"	KD, KA 101,102 O-Bit Custom Keyed
800KI	IH Drawer-KR	26D, US3, 10B	1-1/8" or 1-3/8"	
800KV	VH Drawer-KR	26D, US3, 10B	1-1/8" or 1-3/8"	
Key-retaining (KR): Specify item **800KI** for inverted drawers and **800KV** for vertical drawers. (**KI** and **KV** designation are *only required for key retaining locks*).				

SPECIFICATIONS

Keying: Can be keyed together with other Schlage C Keyway locks
Rekeyable: Easily rekeyable via set screw cylinder release mechanism
ANSI/BHMA: Passed ANSI/BHMA A156.11 Grade 1 performance requirements. Equivalent to E07121 (700S) / E07041 (800S).
US Patent Nos: 4,899,563; 4,920,774
Standard function: Key removable in locked or unlocked position. Standard function locks are non-handed.
Key-retaining: Key removable in locked position only. Specify handing (KL/KR for doors or KI/KV for drawers) when ordering.
Body: Zinc die cast
Cylinder: Will accept other manufacturer's Schlage compatible key-in-knob cylinders
Cylinder length: 1-1/8" or 1-3/8"
Barrel diameter: 1-1/8"
Finish: 26D, US3, 10B
Packaged: Packed 10 per box

KEYING INFORMATION

Keyway: Schlage C keyway
Keys: Includes 2 keys per lock
Cylinder: Solid brass, pin tumbler
Stock keying: KD/KA - 5 pin standard
Stock KA#: 101, 102, O-Bit
Masterkeying: 6 pin standard
Grand masterkeying: Available
Keyblank 6-pin: KBSC-6

INCLUDED ACCESSORIES

For 1-1/8"barrel length locks:
10-350 plastic spacers (qty 2)
10-054 1/4" plastic bar strike
10-055 1/2" plastic bar strike
For 1-3/8"barrel length locks:
10-054 1/4" plastic bar strike

OPTIONAL ACCESSORIES

See the accessories section of this catalog for a complete list.

Spacers: 10-350 (1/8" thick), 10-348 (1/4" thick), 10-349 (1/2" thick)
Strikes: 10-052, 10-056, 10-057, 10-058, 12-2, 12-3, 12-4
Trim ring: TR78
Through-bolt hardware: ETS1 trim plate, ETS1-PL trim pull and ETST1 template

The following warning is applicable to all parts listed on this page:
WARNING: This product can expose you to chemicals including chromium, which is known to the State of California to cause cancer and birth defects or other reproductive harm. for more information go to www.P65Warnings.ca.gov.

Tel: 206.362.3290 | 800.525.0954
Fax 206.362.3569 | www.olympuslock.com

▶ 700LC Door Lock

Less cylinder locks

For SCHLAGE style original or replacement cylinders



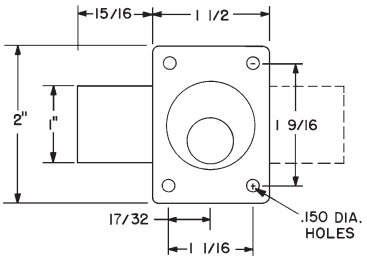

ANSI/BHMA A156.11 Grade 1 E07121

Woodwork Institute (WI) acknowledged product

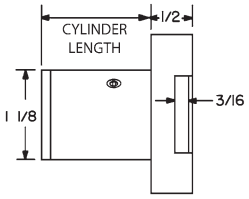

Item	Finish	Cyl. Length	Keying
700LCA	26D, US3, 10B	1-1/8"	Less Cylinder
700LCM	26D, US3, 10B	1-3/8"	
Note: 700LCM 1-3/8" barrel length locks are required for use with Medeco or Assa cylinders.			

▶ 800LC Drawer Lock

Less cylinder locks

For SCHLAGE style original or replacement cylinders



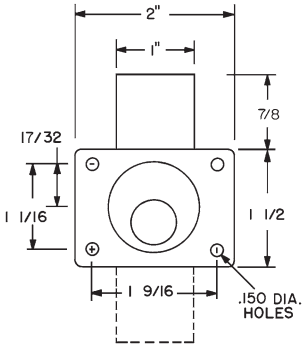

ANSI/BHMA A156.11 Grade 1 E07041

Woodwork Institute (WI) acknowledged product

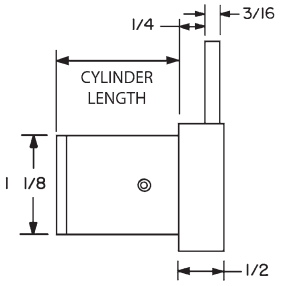

Item	Finish	Cyl. Length	Keying
800LCA	26D, US3, 10B	1-1/8"	Less Cylinder
800LCM	26D, US3, 10B	1-3/8"	
Note: 800LCM 1-3/8" barrel length locks are required for use with Medeco or Assa cylinders.			

▶ 78-KABA-CONV Kaba Conversion Kit

For use with Olympus 700LC and 800LC (less cylinder) cabinet locks. The conversion kit requires the use of the C-form flat washer supplied with the KABA-Peaks cylinder. The washer is needed to keep the Olympus tailpiece on center while operating the lock.

USE WITH THE FOLLOWING CYLINDERS:

KABA-Peaks universal cylinder
#3400-XX-1099 (where "XX" denotes finish)
Mul-T-Lock cylinders

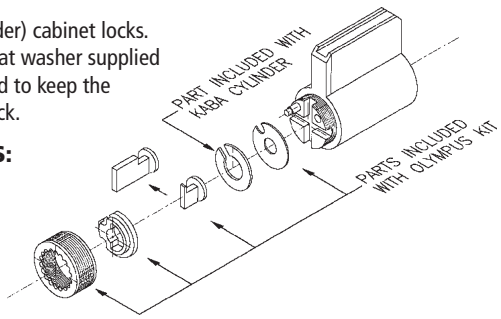

SPECIFICATIONS

Rekeyable: Easily rekeyable via set screw cylinder release mechanism
ANSI/BHMA: Passed ANSI/BHMA A156.11 Grade 1 performance requirements. Equivalent to E07121 (700LC) / E07041 (800LC).
US Patent Nos: 4,899,563; 4,920,774
Body: Zinc die cast
Cylinder: Will accept other manufacturer's Schlage compatible key-in-knob cylinders
Cylinder length: 1-1/8" or 1-3/8"
Barrel diameter: 1-1/8"
Finish: 26D, US3, 10B
Packaged: Packed 10 per box

INCLUDED ACCESSORIES

For 1-1/8"barrel length locks:
10-350 plastic spacers (qty 2)
10-054 1/4" plastic bar strike
10-055 1/2" plastic bar strike
10-361 tailpiece/driver bar
10-360 universal driver, and 1 tailpiece for use with Schlage compatible cylinders
For 1-3/8"barrel length locks:
10-054 1/4" plastic bar strike
10-360 universal driver, and 3 tailpieces for use with Schlage (10-362) compatible, Medeco (10-363) or Assa (10-364) cylinders

CYLINDER INFORMATION

Cylinder: Not included
Includes: All parts necessary to work with other manufacturers cylinders
ILCO cylinder: #1599 (various keyways available)
Assa cylinder: Requires LCM (1-3/8") locks
Assa p/n: #65611
Medeco cylinders: Requires LCM (1-3/8") locks
Original: 6 pin #20-009S4
5 pin #20-008S4
Biaxial: 6 pin #20W009S4
5 pin #20W008S4
Keymark: 6 pin #20K009S4
Key retaining cylinder: #20W200S1
Compatible electronic cylinders: Medeco LOGIC, ASSA CLIQ or VIDEX CyberLock key-in-knob cylinders

OPTIONAL ACCESSORIES

See the accessories section of this catalog for a complete list.

Spacers: 10-350 (1/8" thick), 10-348 (1/4" thick), 10-349 (1/2" thick)
Strikes: 10-052, 10-056, 10-057, 10-058, 12-2, 12-3, 12-4
Driver Bars (tailpiece): For 1 1/8" barrel length locks: 10-361, 10-361-KR (key-retaining).
For 1 3/8" barrel length locks: 10-362, 10-362-KR (key-retaining).
Driver bar for Medeco: 10-363
Driver bar for ASSA: 10-364
Trim ring: TR78
Through-bolt hardware: ETS1 trim plate, ETS1-PL trim pull and ETST1 template
Cylinder: 78-201 Series (page 70)
Other: 78-KABA-CONV conversion kit for KABA-Peaks or Mul-T-Lock cylinders

The following warning is applicable to all parts listed on this page:
WARNING: This product can expose you to chemicals including chromium, which is known to the State of California to cause cancer and birth defects or other reproductive harm. for more information go to www.P65Warnings.ca.gov.

▶ 820S Cam Lock



820S

Note: This lock does not accept Medeco cylinders.



820LC

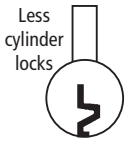

For SCHLAGE style original or replacement cylinders

Woodwork Institute (WI) acknowledged product

Item	Finish	Cyl. Diameter	Mat. Thickness	Keying
820S	26D, US3	1-1/8"	Up to 1-3/8"	KD, KA 101, 102, 0-Bit Custom Keyed
820LC	26D, US3	1-1/8"	Up to 1-3/8"	Less Cylinder

MOUNTING CUTOUT

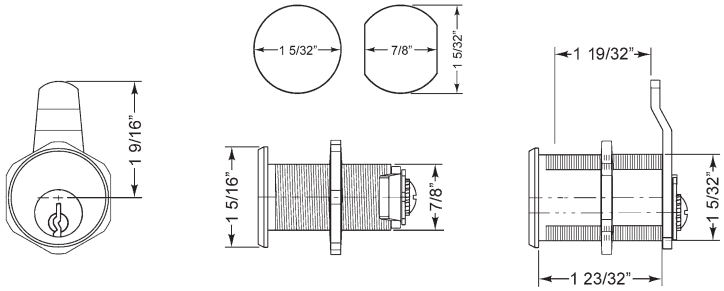

INCLUDED CAMS

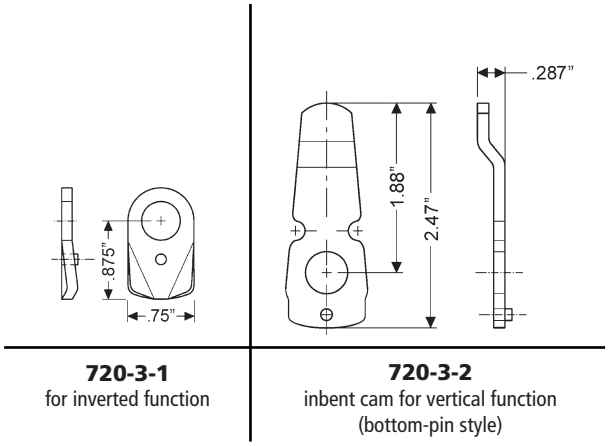

720-3-1
for inverted function

720-3-2
inbent cam for vertical function (bottom-pin style)

SPECIFICATIONS

Rekeyable: Easily rekeyable via set screw on back of lock body
U.S. Patent No: 7,716,958 B2
Cylinder diameter: 1-1/8"
Across flats: 7/8"
Max. material thickness: 1-3/8"
Min. material thickness: 0.08"
Body: Zinc die cast
Functions: Includes parts for key-retaining or non-key-retaining
Finish: 26D or US3
Packaged: Packed 10 per box

820S KEYING INFORMATION

Keying: Can be keyed together with other Schlage C Keyway locks
Keyway: Schlage "C" Keyway
Keys: Includes 2 keys per lock
Cylinder: Solid brass, pin tumbler
Stock keying: KD/KA - 5 pin standard
Stock KA#: 101, 102, O-Bit
Masterkeying: 6 pin standard
Grand masterkeying: Available
Keyblank 6-pin: KBSC-6

820LC CYLINDER INFORMATION

Cylinder: Not included
Accepts: Schlage compatible key-in-knob cylinders including ILCO cylinder #1599. This lock does not accept Medeco cylinders.
Includes: All parts necessary to work with other manufacturers' Schlage compatible cylinders.
Compatible electronic cylinders: ASSA CLIQ or VIDEX CyberLock key-in-knob cylinders.

INCLUDED ACCESSORIES

720-PL3 anti-rotation plate
720-3-1 short inverted cam
720-3-2 long vertical cam
720-CDLM lost motion cam shifter
720-CDDM key retaining door cam shifter
720-KR key retaining drawer cam shifter

OPTIONAL ACCESSORIES

See accessories on page 85-86. See page 86 for cam assembly instructions.

Optional cams: 720-3-3, 720-3-4, 720-3-5
Trim collars: TR200 Series
Cylinder: 78-201 Series (page 70)
Switch accessory pack: SW-1
CL-MP-118: Double-D metal punch (page 75)

The following warning is applicable to all parts listed on this page:
WARNING: This product can expose you to chemicals including chromium, which is known to the State of California to cause cancer and birth defects or other reproductive harm. for more information go to www.P65Warnings.ca.gov.

Tel: 206.362.3290 | 800.525.0954
Fax 206.362.3569 | www.olympuslock.com

▶ 829R Showcase/Ratchet Lock

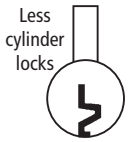

For SCHLAGE style original or replacement cylinders

829R

829R-LC

Woodwork Institute (WI) acknowledged product

FOR BYPASSING SLIDING DOORS

Item	Finish	Mat. Thickness	Keying
829R	26D	Up to 1/4"	KD, KA 101, 102, O-Bit Custom Keyed
829R-LC	26D	Up to 1/4"	Less Cylinder
829-MD	Medeco Driver Pack (required if installing Medeco cylinders in LC (less cylinder product). Sold separately.		
Optional straps:	729RS-2 fits up to 3/8" material thickness 729RS-3 fits up to 5/8" material thickness (adjustable)		

Standard and optional straps with nylon coating available.

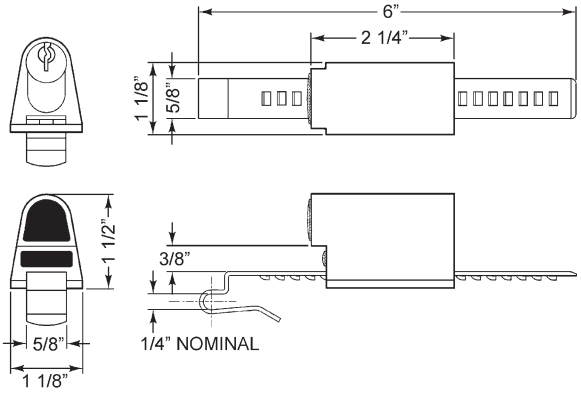

OPTIONAL STRAPS

729RS-2

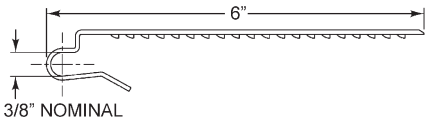

729RS-3

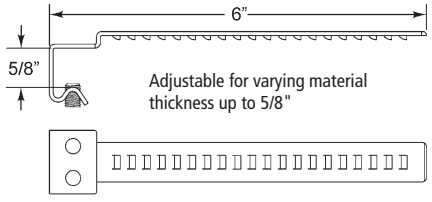

SPECIFICATIONS

Rekeyable: Easily rekeyable via set screw cylinder release mechanism
ANSI/BHMA: Complies with clause 6.3 (8.2~8.4) of ANSI/BHMA A156.11 ANSI standards
Use: Sliding glass or wood doors
Body: Zinc die cast
Strap: Steel
Finish: 26D
Packaged: Packed 10 per box

829R KEYING INFORMATION

Keying: Can be keyed together with other Schlage C Keyway locks
Keyway: Schlage C keyway
Keys: Includes 2 keys per lock
Cylinder: Solid brass pin, tumbler
Stock keying: KD/KA - 5 pin standard
Stock KA#: 101, 102, O-Bit
Masterkeying: 6 pin standard
Grand masterkeying: Available
Keyblank 6-pin: KBSC-6

829R-LC CYLINDER INFORMATION

Cylinder: Not included
Includes: All parts necessary to work with other manufacturers' cylinders
Accepts: Schlage compatible key-in-knob cylinders including ILCO cylinder #1599 and Medeco cylinders
Medeco cylinders: Requires optional 829-MD Medeco Driver Pack (available separately.) Will accept the following Medeco cylinders:
Original: 6 pin #20-009S4
5 pin #20-008S4
Biaxial: 6 pin #20W009S4
5 pin #20W008S4
Keymark: 6 pin #20K009S4
Key retaining cylinder: #20W200S1
Compatible electronic cylinders: Medeco LOGIC, ASSA CLIQ or VIDEX CyberLock key-in-knob cylinders

INCLUDES

729RS-1 strap for 3/16" to 1/4" material thickness

OPTIONAL ACCESSORIES

Alternate straps: 729RS-2 strap for 3/8" material thickness, or 729RS-3 strap for up to 5/8" material thickness
Medeco driver pack: 829-MD (required if using Medeco cylinders)
Cylinder: 78-201 Series (page 70)

The following warning is applicable to all parts listed on this page:
WARNING: This product can expose you to chemicals including chromium, which is known to the State of California to cause cancer and birth defects or other reproductive harm. for more information go to www.P65Warnings.ca.gov.

▶ **L78** Latch Lock

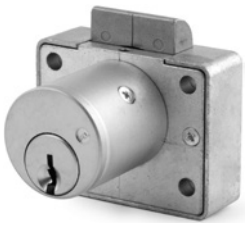

L78V



L78V-LC

FIELD REVERSIBLE INTO ALL FOUR HANDINGS!

Item	Function	Finish	Cyl. Length	Keying
L78R	RH Door	26D, US3	1-1/8" or 1-3/8"	KD, KA 101, 102 Custom Keyed
L78L	LH Door	26D, US3	1-1/8" or 1-3/8"	
L78V	VH Drawer	26D, US3	1-1/8" or 1-3/8"	
L78I	IH Drawer	26D, US3	1-1/8" or 1-3/8"	

SPECIFICATIONS

Reversible: Easily field reversible between door and drawer functions
Rekeyable: Easily rekeyable via set screw cylinder release mechanism
US Patent Nos: 4,899,563; 7,874,189 B2
Body: Zinc die cast
Cylinder length: 1-1/8" or 1-3/8"
Barrel diameter: 1-1/8"
Finish: 26D or US3
Packaged: Packed 10 per box

INCLUDED ACCESSORIES

For 1-1/8"barrel length locks:
10-351 plastic spacers (qty 2)
L78ST-1 lipped strike
For 1-3/8"barrel length locks:
L78ST-2 lipped strike

L78 KEYING INFORMATION

Keying: Can be keyed together with other Schlage C Keyway locks
Keyway: Schlage C keyway
Keys: Includes 2 keys per lock
Cylinder: Solid brass, pin tumbler
Stock keying: KD/KA - 5 pin standard
Stock KA#: 101, 102
Masterkeying: 6 pin standard
Grand masterkeying: Available
Keyblank 6-pin: KBSC-6

L78-LC CYLINDER INFORMATION

Cylinder: Not included
Accepts: Schlage compatible key-in-knob cylinders including ILCO cylinder #1599
Includes: All parts necessary to work with other manufacturers' cylinders
Compatible electronic cylinders: Medeco LOGIC, ASSA CLIQ or VIDEX CyberLock key-in-knob cylinders

OPTIONAL ACCESSORIES

See the accessories section of this catalog for a complete list.

Trim ring: TR78
Spacer: 10-351 (1/8" thick)
Cylinder: 78-201 Series (page 70)

L78V
Vertical Hand (VH)

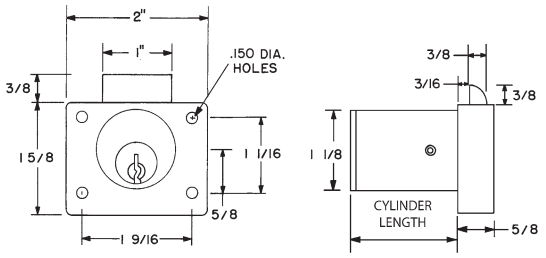

L78I
Inverted Hand (IH)

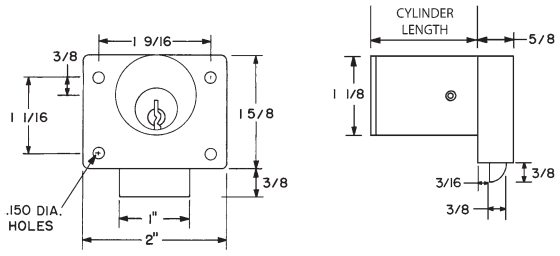

L78L
Left Hand (LH)

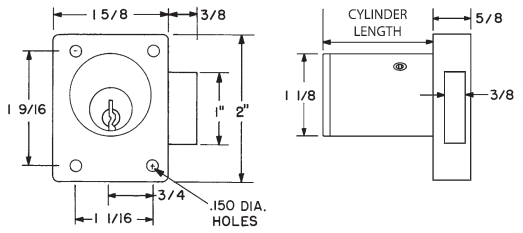

L78R
Right Hand (RH)

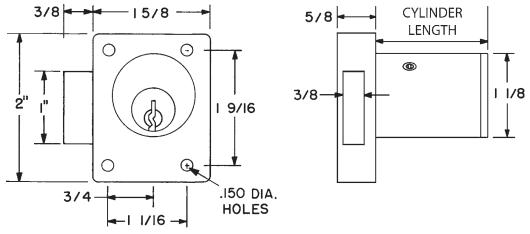

The following warning is applicable to all parts listed on this page:
WARNING: This product can expose you to chemicals including chromium, which is known to the State of California to cause cancer and birth defects or other reproductive harm. for more information go to www.P65Warnings.ca.gov.

Tel: 206.362.3290 | 800.525.0954
Fax 206.362.3569 | www.olympuslock.com

OLYMPUS® LOCK INC

▶ **850S** Deadlatching Drawer Lock



850S



850-LC

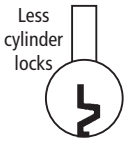

For SCHLAGE style original or replacement cylinders

Item	Function	Finish	Cyl. Length	Keying
850S	VH Drawer	26D, US3	1-1/8"	KD, KA 101, 102 Custom Keyed
850S	VH Drawer	26D, US3	1-3/8"	

Item	Function	Finish	Cyl. Length	Keying
850LCA	VH Drawer	26D, US3	1-1/8"	Less Cylinder
850LCM	VH Drawer	26D, US3	1-3/8"	

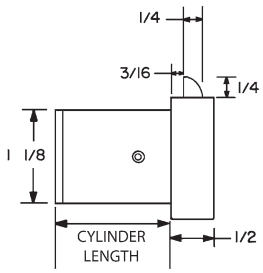

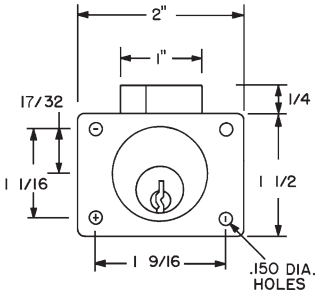

SPECIFICATIONS

Rekeyable: Easily rekeyable via set-screw cylinder removal mechanism
U.S. Patent Nos: 4,899,563; 4,920,774; 5,657,652
Body: Zinc die cast
Cylinder length: 1-1/8" or 1-3/8"
Barrel diameter: 1-1/8"
Finish: 26D or US3
Packaged: Packed 10 per box

INCLUDED ACCESSORIES

For 1-1/8"barrel length locks:
10-350 plastic spacers (qty 2)
850-210 matching strike
For 1-3/8"barrel length locks:
850-211 matching strike

850S KEYING INFORMATION

Keying: Can be keyed together with other Schlage C Keyway locks
Keyway: Schlage C keyway
Keys: Includes 2 keys per lock
Cylinder: Solid brass, pin tumbler
Stock keying: KD/KA - 5 pin standard
Stock KA#: 101, 102
Masterkeying: 6 pin standard
Grand masterkeying: Available
Keyblank 6-pin: KBSC-6

850LC CYLINDER INFORMATION

Cylinder: Not included
Accepts: Schlage compatible key-in-knob cylinders including ILCO cylinder #1599
Includes: All parts necessary to work with other manufacturers' cylinders
Compatible electronic cylinders: Medeco LOGIC, ASSA CLIQ or VIDEX CyberLock key-in-knob cylinders

OPTIONAL ACCESSORIES

See the accessories section of this catalog for a complete list.

Spacers: 10-350 (1/8" thick), 10-348 (1/4" thick), 10-349 (1/2" thick)
Trim ring: TR78
Cylinder: 78-201 Series (page 70)
Through-bolt hardware: ETS1 trim plate, ETS1-PL trim pull and ETST1 template

The following warning is applicable to all parts listed on this page:
WARNING: This product can expose you to chemicals including chromium, which is known to the State of California to cause cancer and birth defects or other reproductive harm. for more information go to www.P65Warnings.ca.gov.

▶ **777** Door Lock

SCHLAGE

For SCHLAGE full-size interchangeable core cylinders

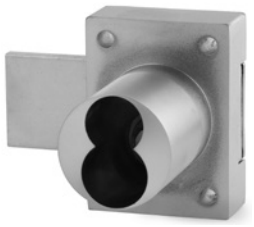

ANSI/BHMA A156.11 Grade 1 E07121

Woodwork Institute (WI) acknowledged product

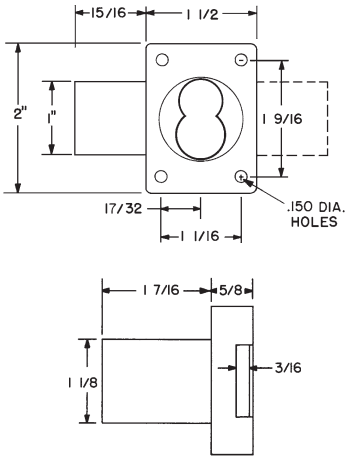

KEY REMOVABLE LOCKED OR UNLOCKED POSITION

Item	Function	Finish	Core	Description
777ICP-DR	Door	26D, US3, 10B	Standard/Classic or Primus/Everest	Lock body - For Schlage full-size IC

KEY RETAINING (KEY REMOVABLE LOCKED POSITION ONLY)

Item	Function	Finish	Core	Description
777IC-DRK	Door-KR	26D, US3, 10B	Standard/Classic	Lock body - For Schlage full-size IC
777P-DRK	Door-KR	26D, US3, 10B	Primus/Everest	
Key-retaining (KR): Cycle to "locked" position before inserting core.				

▶ **888** Drawer Lock

SCHLAGE

For SCHLAGE full-size interchangeable core cylinders



ANSI/BHMA A156.11 Grade 1 E07041

Woodwork Institute (WI) acknowledged product

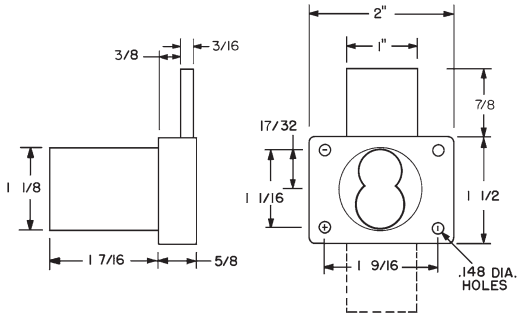

KEY REMOVABLE LOCKED OR UNLOCKED POSITION

Item	Function	Finish	Core	Description
888ICP-DW	Drawer	26D, US3, 10B	Standard/Classic or Primus/Everest	Lock body - For Schlage full-size IC

KEY RETAINING (KEY REMOVABLE LOCKED POSITION ONLY)

Item	Function	Finish	Core	Description
888IC-DWK	Drawer-KR	26D, US3, 10B	Standard/Classic	Lock body - For Schlage full-size IC
888P-DWK	Drawer-KR	26D, US3, 10B	Primus/Everest	
Key-retaining (KR): Cycle to "locked" position before inserting core.				

SPECIFICATIONS

ANSI/BHMA: Passed ANSI/BHMA A156.11 Grade 1 performance requirements. Equivalent to E07121 (777ICP) / E07041 (888ICP)
Standard function: Key removable in locked and unlocked position.
Key-retaining function: Specify core type (Standard/Classic or Primus/Everest) when ordering
Body: Zinc die cast
Cylinder length: 1-7/16"
Barrel diameter: 1-1/8"
Finish: 26D, US3 or 10B
Packaged: Packed 10 per box

CYLINDER INFORMATION

Cylinder: Not included
Accepts: Schlage large format/full-size IC cylinders
- Schlage Quad, Numbered Section, and Schlage Classic IC cores
- Schlage Primus® and Everest large format IC cores
- Mul-T-Lock large format IC cores

Compatible electronic cylinders: VIDEX CyberLock LFIC cylinders

INCLUDED ACCESSORIES

7788-PA-D actuator to operate lock without core
10-350 plastic spacers (qty 3)
10-054 1/4" plastic bar strike
10-055 1/2" plastic bar strike

OPTIONAL ACCESSORIES

See the accessories section of this catalog for a complete list.

Spacers: 10-350 (1/8" thick), 10-348 (1/4" thick), 10-349 (1/2" thick)
Strikes: 10-052, 10-056, 10-057, 10-058, 12-2, 12-3, 12-4
Trim ring: TR78
Through-bolt hardware: ETS1 trim plate, ETS1-PL trim pull and ETST1 template

The following warning is applicable to all parts listed on this page:
WARNING: This product can expose you to chemicals including chromium, which is known to the State of California to cause cancer and birth defects or other reproductive harm. for more information go to www.P65Warnings.ca.gov.

Tel: 206.362.3290 | 800.525.0954
Fax 206.362.3569 | www.olympuslock.com

OLYMPUS® LOCK INC

▶ **920** Cam Lock



For SCHLAGE full-size interchangeable core cylinders

MOUNTING CUTOUT

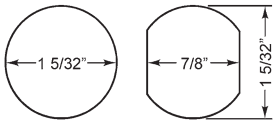

720-PL3
anti-rotation plate

ANSI/BHMA A156.11 Grade 1 E07261/E07271

Woodwork Institute (WI) acknowledged product

Item	Finish	Cyl. Diameter	Mat. Thickness	Description
920LM/DM	26D, US3	1-1/8"	Up to 1-1/8"	Lock body - For Schlage full-size IC

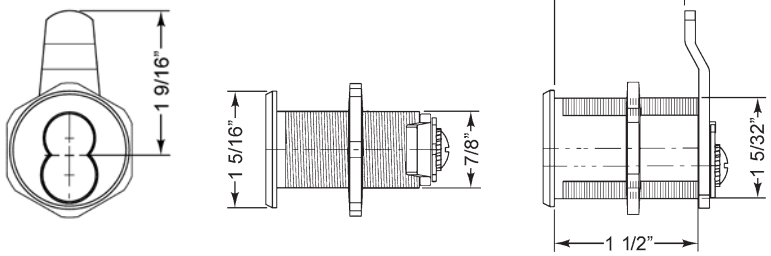

INCLUDED CAMS

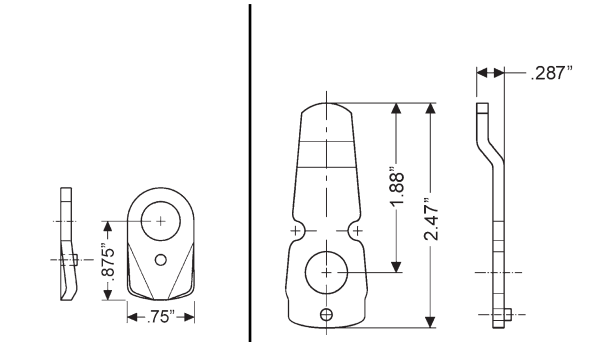

720-3-1
for inverted function

720-3-2
inbent cam for vertical function (bottom-pin style)

SPECIFICATIONS

ANSI/BHMA: Passed ANSI/BHMA A156.11 Grade 1 performance requirements. Equivalent to E07261/E07271.
Cylinder diameter: 1-1/8"
Across flats: 7/8"
Max. material thickness: 1-3/16"
Min. material thickness: 0.08"
Functions: Includes parts for key-retaining or non-key-retaining function
Body: Zinc die cast
Finish: 26D or US3
Packaged: 10 per box

CYLINDER INFORMATION

Cylinder: Not included
Accepts: Schlage large format/full-size IC cylinders
- Schlage Quad, Numbered Section, and Schlage Classic IC cores
- Schlage Primus® and Everest large format IC cores
- Mul-T-Lock large format IC cores

Compatible electronic cylinders: VIDEX CyberLock LFIC cylinders

INCLUDED ACCESSORIES

7788-PA-D actuator to operate lock without core
720-PL3 anti-rotation plate
720-3-1 short inverted cam
720-3-2 long vertical cam
720-CDLM lost motion cam shifter
720-CDDM key retaining door cam shifter
720-KR key retaining drawer cam shifter

OPTIONAL ACCESSORIES

See accessories on page 85-86. See page 86 for cam assembly instructions.

Optional cams: 720-3-3, 720-3-4, 720-3-5
Trim collars: TR200 Series
Switch accessory pack: SW-1
CL-MP-118: Double-D metal punch (page 75)

The following warning is applicable to all parts listed on this page:
WARNING: This product can expose you to chemicals including chromium, which is known to the State of California to cause cancer and birth defects or other reproductive harm. for more information go to www.P65Warnings.ca.gov.

▶ **929R** Showcase/Ratchet Lock

SCHLAGE

For SCHLAGE full-size interchangeable core cylinders



Woodwork Institute (WI) acknowledged product

FOR BYPASSING SLIDING DOORS

Item	Finish	Mat. Thickness	Description
929R	26D	Up to 1/4"	Lock body - For Schlage full-size IC
Optional straps:	729RS-2 fits up to 3/8" material thickness 729RS-3 fits up to 5/8" material thickness (adjustable)		

Standard and optional straps with nylon coating available.

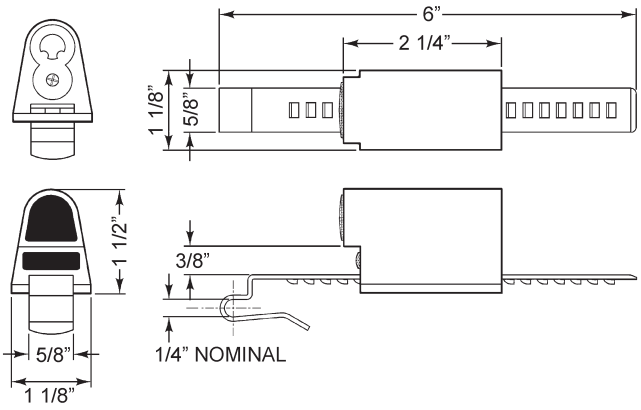

OPTIONAL STRAPS

729RS-2

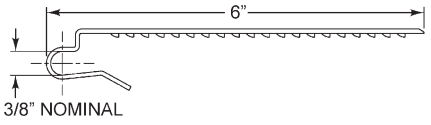

729RS-3

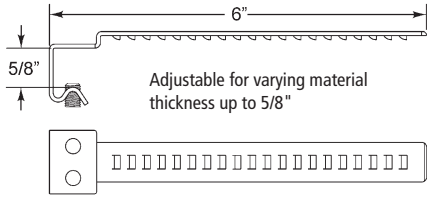

SPECIFICATIONS

ANSI/BHMA: Complies with clause 6.3 (8.2~8.4) of ANSI/BHMA A156.11 1999 ANSI standards
Use: Sliding glass or wood doors
Body: Zinc die cast
Strap: Steel
Finish: 26D
Packaged: Packed 10 per box

CYLINDER INFORMATION

Cylinder: Not included
Accepts: Schlage large format/full-size IC cylinders
- Schlage Quad, Numbered Section, and Schlage Classic IC cores
- Schlage Primus® and Everest large format IC cores
- Mul-T-Lock large format IC cores

Compatible electronic cylinders: VIDEX CyberLock LFIC cylinders

INCLUDED ACCESSORIES

7788-PA-D plastic thumbturn
729RS-1 strap for 3/16" to 1/4" material thicknesses

OPTIONAL STRAPS

Alternate straps: 729RS-2 strap for 3/8" material thickness, or 729RS-3 strap for up to 5/8" material thickness

The following warning is applicable to all parts listed on this page:
WARNING: This product can expose you to chemicals including chromium, which is known to the State of California to cause cancer and birth defects or other reproductive harm. for more information go to www.P65Warnings.ca.gov.

Tel: 206.362.3290 | 800.525.0954
Fax 206.362.3569 | www.olympuslock.com

OLYMPUS® LOCK INC

▶ **L92V** Latch Lock

For SCHLAGE full-size interchangeable core cylinders



For door applications, place lock on side.

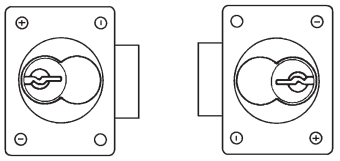

Left-Hand Door | Right-Hand Door

Item	Handing	Finish	Cyl. Length	Keying
L92V	VH Drawer	26D, US3	1-7/16"	Lock body - For Schlage full-size IC

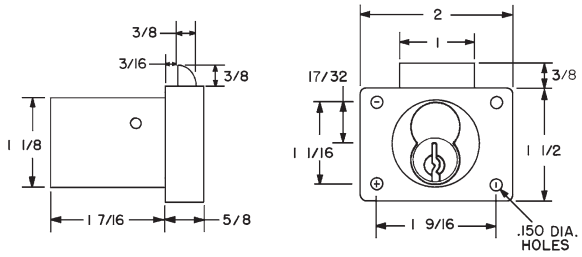

SPECIFICATIONS

Function: Spring latch
Body: Zinc die cast
Barrel diameter: 1-1/8"
Cylinder length: 1-7/16"
Latch projection: 3/8"
Handing: Drawer Vertical
Finish: 26D or US3
Packaged: Packed 10 per box

CYLINDER INFORMATION

Cylinder: Not included
Accepts: Schlage large format/full-size IC cylinders
- Schlage Quad, Numbered Section, and Schlage Classic IC cores
- Schlage Primus® and Everest large format IC cores
- Mul-T-Lock large format IC cores

Compatible electronic cylinders: VIDEX CyberLock LFIC cylinders

INCLUDED ACCESSORIES

10-350 spacers (qty 3)
L78ST-1-SS matching lip strike
7788-PA-D plastic thumbturn

OPTIONAL ACCESSORIES

See the accessories section of this catalog for a complete list.

Spacers: 10-350 (1/8" thick), 10-348 (1/4" thick), 10-349 (1/2" thick)
Trim ring: TR78
Through-bolt hardware: ETS1 trim plate, ETS1-PL trim pull and ETST1 template

The following warning is applicable to all parts listed on this page:
WARNING: This product can expose you to chemicals including chromium, which is known to the State of California to cause cancer and birth defects or other reproductive harm. for more information go to www.P65Warnings.ca.gov.

▶ CR1125RD Rim Deadbolt

CORBIN RUSSWIN

For CORBIN RUSSWIN interchangeable core cylinders



CR1125RD
CR1125RDVH



CR1125RDLH



CR1125RDRH

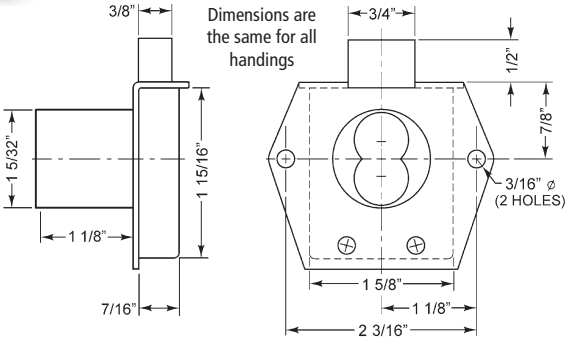

Woodwork Institute (WI) acknowledged product

Part No.	Function	Finish	Cyl. Length	Description
CR1125RDRH	RH Door	26D	1-1/8"	Lock body - For Corbin/Russwin IC
CR1125RDLH	LH Door	26D	1-1/8"	
CR1125RDVH	VH Drawer	26D	1-1/8"	

SPECIFICATIONS

Mounting: Rim (surface)
Function: Key removable in locked and unlocked position
Barrel diameter: 1-5/32"
Cylinder length: 1-1/8"
Body: Zinc die cast cylinder housing, steel back plate and steel case
Finish: 26D
Packaged: Packed 10 per box

CYLINDER INFORMATION

Cylinder: Not included
Accepts: Corbin/Russwin interchangeable core cylinders

INCLUDED ACCESSORIES

725-PA plastic thumbturn
1125-1 spacer to fit 6 or 7 pin cores
725-SP-RD solid rectangular strike

OPTIONAL ACCESSORIES

See the accessories section of this catalog for a complete list.

Spacers: WP725 (1/8" thick), WP726 (1/4" thick)
Strikes: 725-SP Series

▶ CR1125RL Rim Latch

CORBIN RUSSWIN

For CORBIN RUSSWIN interchangeable core cylinders



CR1125RL
CR1125RLVH

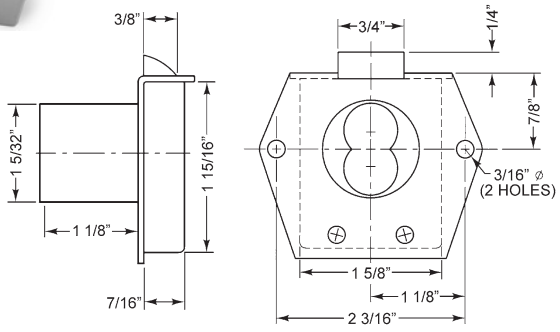

Woodwork Institute (WI) acknowledged product

Part No.	Function	Finish	Cyl. Length	Description
CR1125RLVH	VH Drawer	26D	1-1/8"	Lock body - For Corbin/Russwin IC

SPECIFICATIONS

Mounting: Rim (surface)
Barrel diameter: 1-5/32"
Cylinder length: 1-1/8"
Latch projection: 1/4"
Body: Zinc die cast cylinder housing, steel back plate and steel case
Finish: 26D
Packaged: Packed 10 per box

CYLINDER INFORMATION

Cores: Less cylinder
Accepts: Corbin/Russwin interchangeable core cylinders

INCLUDED ACCESSORIES

725-PA actuator to operate lock without core
1125-1 spacer to fit 6 or 7 pin cores
725-SP-RL solid lipped strike

OPTIONAL ACCESSORIES

See the accessories section of this catalog for a complete list.

Spacers: WP725 (1/8" thick), WP726 (1/4" thick)
Strikes: 725-SP Series

The following warning is applicable to all parts listed on this page:
WARNING: This product can expose you to chemicals including chromium, which is known to the State of California to cause cancer and birth defects or other reproductive harm. for more information go to www.P65Warnings.ca.gov.

Tel: 206.362.3290 | 800.525.0954
Fax 206.362.3569 | www.olympuslock.com

▶ CR25 Cam Lock

CORBIN RUSSWIN

For CORBIN RUSSWIN interchangeable core cylinders



MOUNTING CUTOUT

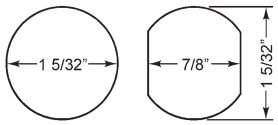

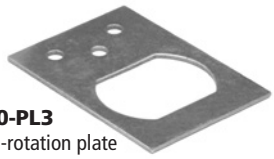

720-PL3
anti-rotation plate

Item	Finish	Cyl. Diameter	Mat. Thickness	Description
CR25LM/DM	26D	1-1/8"	Up to 1-1/8"	Lock body - For Corbin/Russwin IC

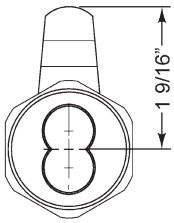

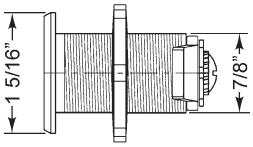

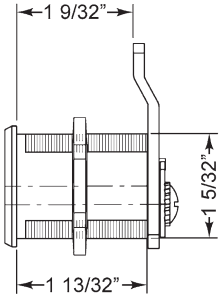

INCLUDED CAMS

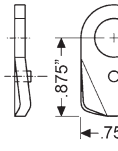

720-3-1
for inverted function

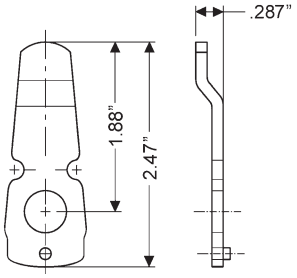

720-3-2
inbent cam for vertical function
(bottom-pin style)

SPECIFICATIONS

Cylinder diameter: 1-1/8"
Across flats: 7/8"
Max. material thickness: 1-1/8"
Min. material thickness: 0.08"
Functions: Includes parts for key-retaining or non-key-retaining function
Body: Zinc die cast
Finish: 26D
Packaged: 10 per box

CYLINDER INFORMATION

Cylinder: Not included
Accepts: Corbin/Russwin interchangeable core cylinders

INCLUDED ACCESSORIES

725-PA plastic thumbturn
725-1 spacer to fit 6 or 7 pin cores
720-PL3 anti-rotation plate
720-3-1 short inverted cam
720-3-2 long vertical cam
720-CDLM lost motion cam shifter
720-CDDM key retaining door cam shifter
720-KR key retaining drawer cam shifter

OPTIONAL ACCESSORIES

See accessories on page 85-86. See page 86 for cam assembly instructions.

Optional cams: 720-3-3, 720-3-4, 720-3-5
Trim collars: TR200 Series
Switch accessory pack: SW-1
CL-MP-118: Double-D metal punch (page 75)

The following warning is applicable to all parts listed on this page:
WARNING: This product can expose you to chemicals including chromium, which is known to the State of California to cause cancer and birth defects or other reproductive harm. for more information go to www.P65Warnings.ca.gov.

▶ 931DR Door Lock

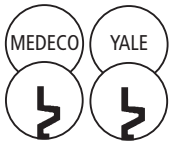

For MEDECO/YALE style large format interchangeable core cylinders



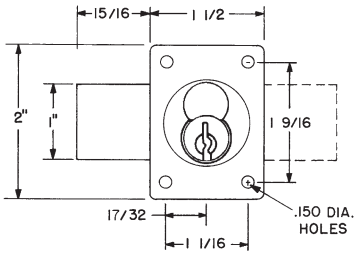

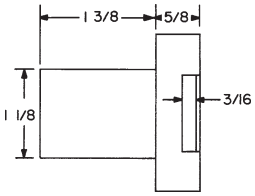

IMPORTANT: Medeco "Keymark" cylinders require Best compatible (small format) cabinet lock bodies (See 721DR/DW).

Woodwork Institute (WI) acknowledged product

KEY REMOVABLE LOCKED OR UNLOCKED POSITION

Item	Function	Finish	Cyl. Length	Description
931DR	Door	26D, US3	1-3/8"	Lock body - For Medeco/Yale large format IC

KEY RETAINING (KEY REMOVABLE LOCKED POSITION ONLY)

Item	Function	Finish	Cyl. Length	Description
931DR-KR	Door-KR	26D, US3	1-3/8"	Lock body - For Medeco/Yale large format IC
Key-Retaining (KR): Cycle to "locked" position before inserting core.				

▶ 931DW Drawer Lock

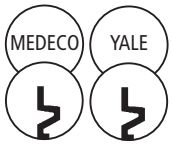

For MEDECO/YALE style large format interchangeable core cylinders

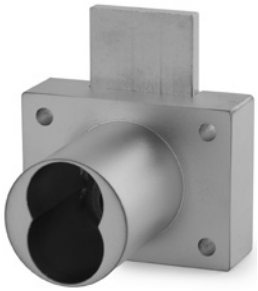

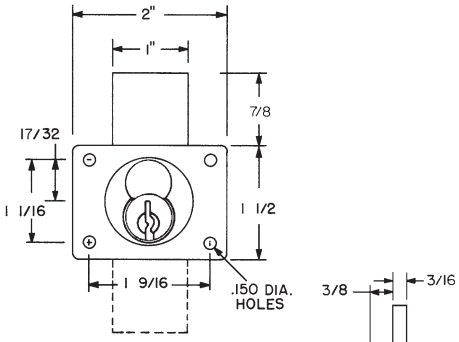

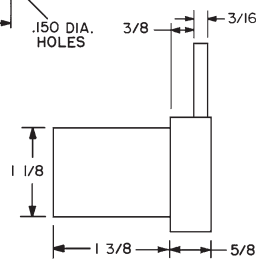

IMPORTANT: Medeco "Keymark" cylinders require Best compatible (small format) cabinet lock bodies (See 721DR/DW).

Woodwork Institute (WI) acknowledged product

KEY REMOVABLE LOCKED OR UNLOCKED POSITION

Item	Function	Finish	Cyl. Length	Description
931DW	Drawer	26D, US3	1-3/8"	Lock body - For Medeco/Yale large format IC

KEY RETAINING (KEY REMOVABLE LOCKED POSITION ONLY)

Item	Function	Finish	Cyl. Length	Description
931DW-KR	Drawer-KR	26D, US3	1-3/8"	Lock body - For Medeco/Yale large format IC
Key-Retaining (KR): Cycle to "locked" position before inserting core.				

SPECIFICATIONS

Standard function: Key removable in locked and unlocked position.
Key-retaining function: Key removable in locked position only. Specify ***-KR*** for key retaining.
Cylinder length: 1-3/8"
Barrel diameter: 1-1/8"
Body: Zinc die cast
Finish: 26D or US3
Packaged: Packed 10 per box

CYLINDER INFORMATION

Cylinder: Not included
Medeco cylinder: Accepts Medeco #32-0201 (6-pin) IC cylinder and Medeco #31-0100 (6-pin) Yale IC compatible cylinder.
Yale cylinder: Accepts Yale 1210 Series (6-pin) IC core cylinder
ASSA cylinder: Accepts ASSA's 6-pin, Yale-compatible large format IC cylinder.
Special note: Medeco "Keymark" cylinders require Best compatible (small format) cabinet lock bodies.

INCLUDED ACCESSORIES

931-PA plastic thumbturn
931-1 spacer for 6-pin Medeco cores
10-350 plastic spacers (qty 3)
10-054 1/4" plastic bar strike
10-055 1/2" plastic bar strike

OPTIONAL ACCESSORIES

See the accessories section of this catalog for a complete list.

Spacers: 10-350 (1/8" thick), 10-348 (1/4" thick), 10-349 (1/2" thick)
Strikes: 10-052, 10-056, 10-057, 10-058, 12-2, 12-3, 12-4
Trim ring: TR78
Through-bolt hardware: ETS1 trim plate, ETS1-PL trim pull and ETST1 template

The following warning is applicable to all parts listed on this page:
WARNING: This product can expose you to chemicals including chromium, which is known to the State of California to cause cancer and birth defects or other reproductive harm. for more information go to www.P65Warnings.ca.gov.

Tel: 206.362.3290 | 800.525.0954
Fax 206.362.3569 | www.olympuslock.com

▶ **ME93** Cam Lock

IMPORTANT: Medeco "Keymark" cylinders require Best compatible (small format) cabinet lock bodies (See 720LM/DM or 721DR/DW).

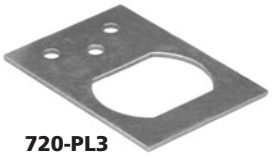

720-PL3
Anti-rotation plate



For MEDECO style large format interchangeable core cylinders

Item	Finish	Cyl. Diameter	Mat. Thickness	Description
ME93LM/DM	26D	1-1/8"	Up to 1-1/8"	Lock body - For **Medeco** Large Format IC

▶ **YA93** Cam Lock



720-PL3
Anti-rotation plate



For YALE style 6-pin large format interchangeable core cylinders

Item	Finish	Cyl. Diameter	Mat. Thickness	Description
YA93LM/DM	26D	1-1/8"	Up to 1-1/8"	Lock body - For **Yale** Large Format IC
YA93LM/DM includes two separate prong drivers: The prong driver for the Yale and/or Assa-Yale IC core comes standard assembled into the lock. A separate prong driver labeled with a number "**2**" is included and should be installed (in place of the standard driver) if using the Medeco-Yale cylinder.				

MOUNTING CUTOUT

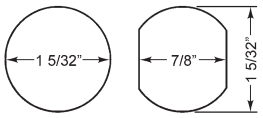

INCLUDED CAMS

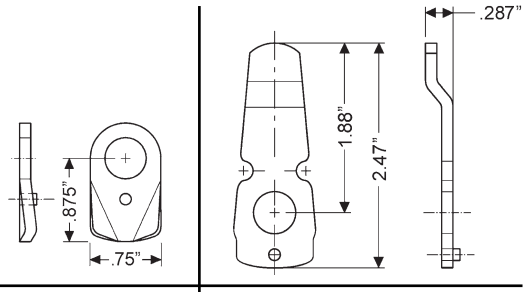

720-3-1
for inverted function

720-3-2
inbent cam for vertical function (bottom-pin style)

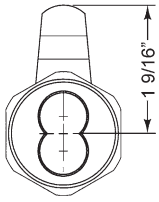

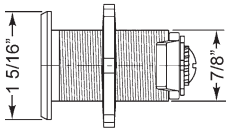

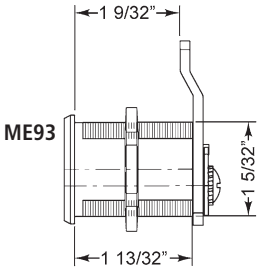

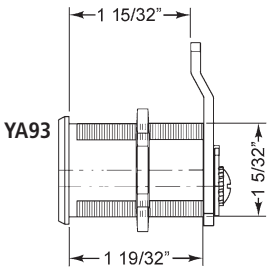

SPECIFICATIONS

Cylinder diameter: 1-1/8"
Across flats: 7/8"
ME93 Max. material thickness: 1-1/4"
YA93 Max. material thickness: 1-5/16"
Min. material thickness: 0.08"
Functions: Includes parts for key-retaining or non-key-retaining function
Body: Zinc die cast
Finish: 26D
Packaged: 10 per box

ME93 CYLINDER INFORMATION

Cores: Not included.
Medeco cylinder: Accepts Medeco #32-0201 (6-pin) IC cylinder.
Special note: Medeco "Keymark" cylinders require Best compatible (small format) cabinet lock bodies.

YA93 CYLINDER INFORMATION

Cores: Not included.
Yale cylinder: Accepts Yale 1210 Series (6-pin) IC cylinder.
Assa cylinder: Accepts ASSA's 6-pin, Yale-compatible large format IC cylinder.
Medeco cylinder: Accepts Medeco's 31 Series Yale-compatible large format IC cylinder.

INCLUDED ACCESSORIES

931-PA plastic thumbturn
720-PL3 anti-rotation plate
720-3-1 short inverted cam
720-3-2 long vertical cam
720-CDLM lost motion cam shifter
720-CDDM key retaining door cam shifter
720-KR key retaining drawer cam shifter
(YA93 only) YA93-PD-2 optional prong driver for Medeco/Yale IC cylinders

OPTIONAL ACCESSORIES

See accessories on page 85-86. See page 86 for cam assembly instructions.

Optional cams: 720-3-3, 720-3-4, 720-3-5
Trim collars: TR200 Series
Switch accessory pack: SW-1
CL-MP-118: Double-D metal punch (page 75)

The following warning is applicable to all parts listed on this page:
WARNING: This product can expose you to chemicals including chromium, which is known to the State of California to cause cancer and birth defects or other reproductive harm. for more information go to www.P65Warnings.ca.gov.

▶ **SA54** Cam Lock

SARGENT

For SARGENT interchangeable core cylinders



MOUNTING CUTOUT

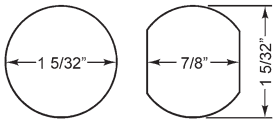

SPECIFICATIONS

Cylinder diameter: 1-1/8"
Across flats: 7/8"
Max. material thickness: 1-1/8"
Min. material thickness: 0.08"
Functions: Includes parts for key-retaining or non-key-retaining function
Body: Zinc die cast
Finish: 26D
Packaged: Packed 10 per box

CYLINDER INFORMATION

Cylinder: Not included
Accepts: Sargent 6300 Series or Sargent Degree interchangeable core cylinders

INCLUDED ACCESSORIES

Plastic actuator to operate lock without core
720-PL3 anti-rotation plate
720-3-1 short inverted cam
720-3-2 long vertical cam
720-CDLM lost motion cam shifter
720-CDDM key retaining door cam shifter
720-KR key retaining drawer cam shifter

OPTIONAL ACCESSORIES

See accessories on page 85-86. See page 86 for cam assembly instructions.

Optional cams: 720-3-3, 720-3-4, 720-3-5
Trim collars: TR200 Series
Switch accessory pack: SW-1
CL-MP-118: Double-D metal punch (page 75)

Item	Finish	Cyl. Diameter	Mat. Thickness	Description
SA54LM/DM	26D	1-1/8"	Up to 1-1/8"	Lock body - For use with Sargent IC

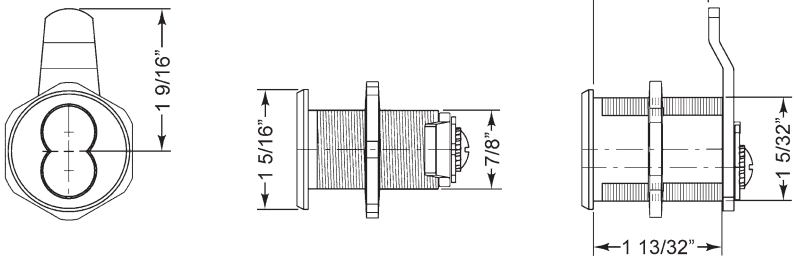

See page 33 for Sargent standard cylinder locks



INCLUDED CAMS

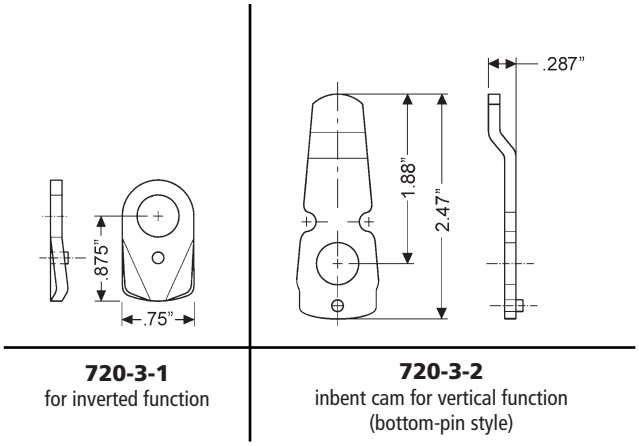

720-3-1
for inverted function

720-3-2
inbent cam for vertical function
(bottom-pin style)

The following warning is applicable to all parts listed on this page:
WARNING: This product can expose you to chemicals including chromium, which is known to the State of California to cause cancer and birth defects or other reproductive harm. for more information go to www.P65Warnings.ca.gov.

Tel: 206.362.3290 | 800.525.0954
Fax 206.362.3569 | www.olympuslock.com

OLYMPUS® LOCK INC

▶ SLT-01 Door or Drawer Latch Lock

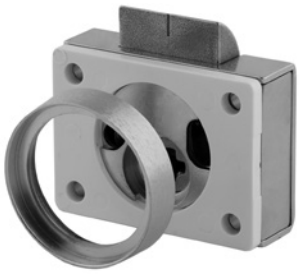

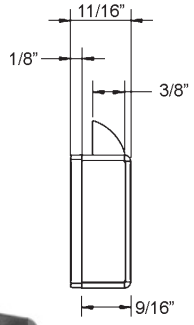

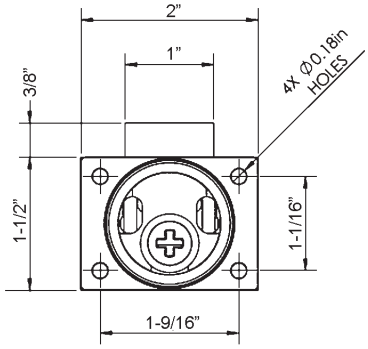

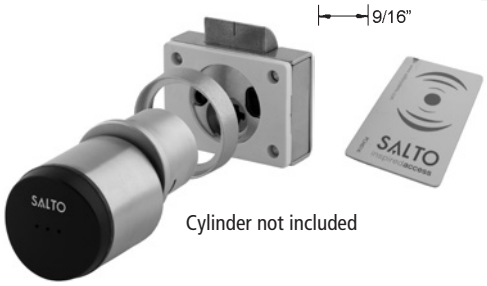

Cylinder not included

Item	Finish	Cyl. Length	Barrel Diameter	Description
SLT-01	26D	Determined by provided rim cylinder screws and tailpiece	1-9/64"	Cabinet Lock Conversion Kit for SALTO Electronic Rim Cylinder and other third party US rim cylinders

▶ SLT-02 Door or Drawer Deadbolt Lock



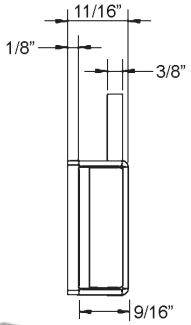

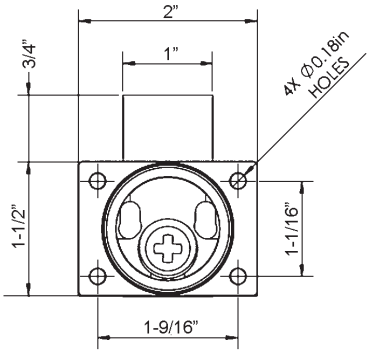



Cylinder not included

Item	Finish	Cyl. Length	Barrel Diameter	Description
SLT-02	26D	Determined by provided rim cylinder screws and tailpiece	1-9/64"	Cabinet Lock Conversion Kit for SALTO Electronic Rim Cylinder and other third party US rim cylinders

Salto, XS4 and GEO are registered tradenames of Salto Systems S.L.

SPECIFICATIONS

Conversion Kit: allows you to convert a SALTO US rim cylinder and other third party US rim cylinders into a latch or deadbolt cabinet lock.
Standard Function: non-handed, will work for cabinet doors or drawers.
Accepts: SALTO G9B1 GEO US rim cylinder and other third party US rim cylinders.
US Patent No: 11,124,988 B1
Rim Cylinder: not included
Barrel diameter: 1-9/64"
Finish: 26D
Packaged: packed 20 per box

INCLUDED ACCESSORIES

SLT-01: 10-350 plastic spacer, L78ST-1-SS stainless steel limp strike, SLT-TR 21/64" trim bezel
SLT-02: 10-350 plastic spacer, 10-054 1/4" plastic bar strike, SLT-TR 21/64" trim bezel

OPTIONAL ACCESSORIES

SLT-01: Plastic spacers 10-350, 10-348, 10-349. Strikes L78ST-1, L78ST-2
SLT-02: Plastic spacers 10-350, 10-348, 10-349. Strikes 10-054, 10-055, 10-057, 10-058, 10-052, 10-056, 12-1, 12-2, 12-3, 12-4

ASSEMBLY

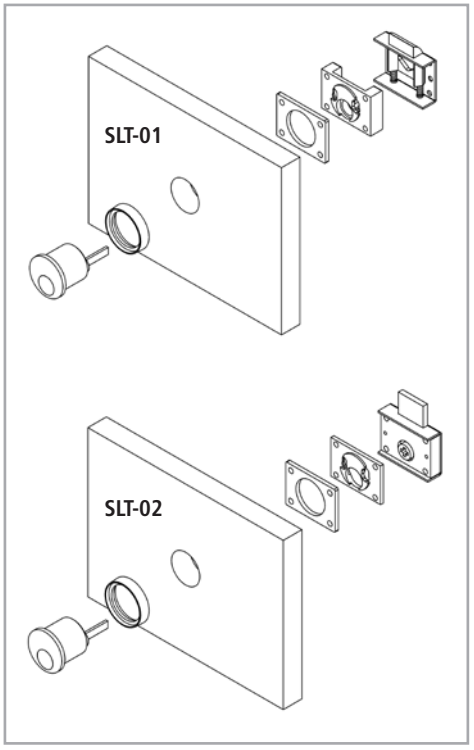

The following warning is applicable to all parts listed on this page:
WARNING: This product can expose you to chemicals including chromium, which is known to the State of California to cause cancer and birth defects or other reproductive harm. for more information go to www.P65Warnings.ca.gov.

▶ **P3L** Enclosure Locks

Police Call Box, Fire Alarm Lock Warded Keyway





KB-P3L-LK (3-9/32″) available separately

SPECIFICATIONS

Type: Warded enclosure lock
Typical application: Police call boxes, fire alarm boxes
Retrofits: CCL R557SGS
Material: Zinc die cast
Finish: US3 polished brass
Handing: Right-hand standard
Includes: One standard length key per lock
Long Key: Optional long key 3-9/32″ available separately item# KB-P3L-LK

KEYING INFORMATION

Stock keying: Keyed alike, warded key

Item	Finish	Function	Keying	Description
P3L-RH-US3-SK	US3	RH Door, Spring Loaded Latch	Stock KA, Warded Key	For use in police call boxes or fire alarm boxes.
Keys				
KB-P3L-SK	Standard key. Ships with lock. Also available separately.			
KB-P3L-LK	Long key. Available separately.			



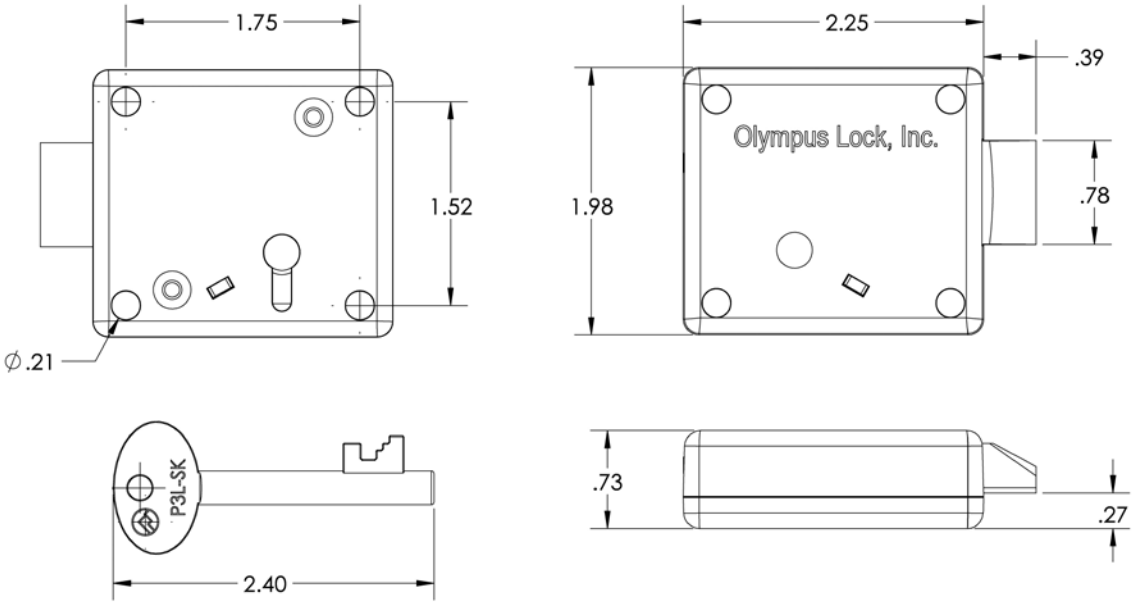

The following warning is applicable to all parts listed on this page:
WARNING: This product can expose you to chemicals including chromium, which is known to the State of California to cause cancer and birth defects or other reproductive harm. for more information go to www.P65Warnings.ca.gov.

Tel: 206.362.3290 | 800.525.0954
Fax 206.362.3569 | www.olympuslock.com

▶ **E5D / E5L** Enclosure Locks

For NEMA Metal Traffic Control Boxes

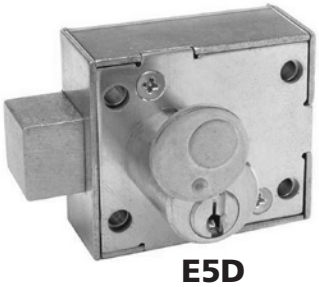

E5D
(SPRING BOLT/ SQUARE LATCH)

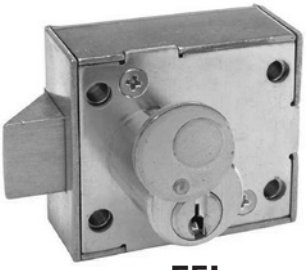

E5L
(SPRING LATCH)

CR KEYWAY

Item	Keyway	Function	Finish	Cyl. Length	Keying
E5D	CR	RH Door, Spring Bolt	US3	7/8"	Stock KA#2 (CR keyway) Custom keying available
E5L	CR	RH Door, Latch	US3	7/8"	

GR KEYWAY

Item	Keyway	Function	Finish	Cyl. Length	Keying
E5DG	GR	RH Door, Spring Bolt	US3	7/8"	Custom keyed (GR keyway)
E5LG	GR	RH Door, latch	US3	7/8"	

E5D

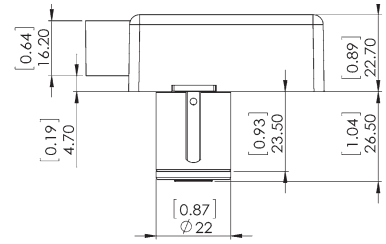

E5L

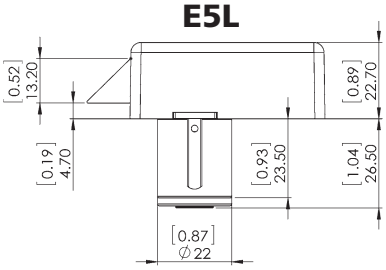

E5D/E5L

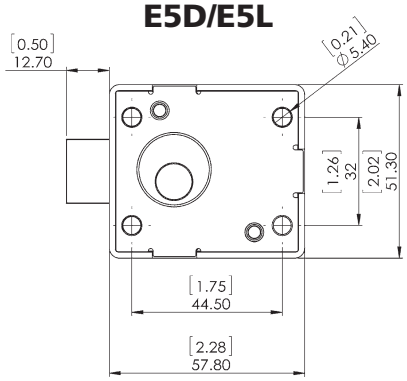

SPECIFICATIONS

Type: Enclosure lock for NEMA-style traffic control boxes
Retrofits: CCL A55481. *Note: CCL A15481 is with solid brass construction. Olympus E5 Series includes zinc die cast cylinder, lock housing and bolt.*
For material thickness: 7/8"
Barrel diameter: 7/8"
Operation: 1/4 key turn retracts bolt/latch
Dust Cap: Includes dust cap to cover and protect keyway
Material: Zinc die cast
Finish: US3 Polished Brass
Handing: Right-hand standard. For left-hand, lock can be rotated 180 degrees.

CR KEYWAY KEYING INFORMATION

Stock keying: Keyed alike #2 (CR Keyway)
Custom keying: Keyed alike, keyed different or masterkeyed available
Cylinder: 5-pin tumbler
Includes: Two keys per lock
Cut #2 Keys: CR Keyway KA#2 - KBCR-KA2-NP
Custom Keys: CR Keyway - KBCR-5-CUST
Key Blank: CR Keyway - KBCR-5-NP

GR KEYWAY KEYING INFORMATION

Stock keying: n/a
Custom keying: Keyed alike, keyed different or masterkeyed available
Cylinder: 5-pin tumbler
Includes: Two keys per lock
Custom Cut Keys: GR Keyway KBGR-NP-CUST
Key Blank: GR Keyway - KBGR-5-NP

E5D/E5L FOR METAL CABINETS/ENCLOSURES

Locking mechanism
(inside of cabinet)



To open cabinet, bolt retracts allowing handle on outside to rotate disk, disengaging top and bottom latching mechanisms. When handle and disk are moved back into the closed position, bolt springs back into slot in disk and the cabinet is locked.

The following warning is applicable to all parts listed on this page:
WARNING: This product can expose you to chemicals including chromium, which is known to the State of California to cause cancer and birth defects or other reproductive harm. for more information go to www.P65Warnings.ca.gov.

▶ 725RSL Enclosure Lock
For NEMA Metal Traffic Control Boxes

BEST

For BEST style interchangeable core cylinders



725RSL-LH



725RSL-RH



725RSL-VH
SQUARE SPRING LATCH

SPECIAL NOTE: This is a spring loaded square latch for metal enclosures only. For standard deadbolt function (used in wood casework), see 725RD or 725MD series locks.

SPECIFICATIONS
Retrofits: Best 5L7RD (with option code "SL" square latch, spring loaded)
Mounting: Rim (surface)
Square latch (725RSL): Available for VH, RH or LH functions
Material: Solid brass cylinder housing, steel back plate and steel case
Cylinder length: 1-1/16"
Barrel diameter: 1-1/8"
Finish: 26D or US4
Packaged: Packed 10 per box

KEYING INFORMATION
Cores: Not included. We can match painted BEST cores (blue, red, green, white or orange).
Accepts: Best, Arrow, Falcon, KSP, Schlage SFIC or equivalent small format interchangeable cores
Compatible electronic cylinders: Medeco Nexgen XT or VIDEX CyberLock SFIC cylinders

INCLUDED ACCESSORIES
725-1 spacer to fit 6 or 7 pin cores
725-SP-RL solid lipped strike
725-PA plastic thumbturn

OPTIONAL ACCESSORIES
See the accessories section of this catalog for a complete list.

Spacers: WP725 (1/8" thick), WP726 (1/4" thick)
Strikes: 725-SP Series
SFIC cores: 206/207 Series (page 69)

IMPORTANT NOTE
For standard deadbolt function see **725RD** or **725MD**
For standard spring latch function see **725RL** or **725ML**

Item	Function	Finish	Cyl. Length	Description
725RSL-RH	RH Door	26D, US4	1-1/16"	Lock body - For small format IC Specialized spring bolt function for metal cabinet enclosures.
725RSL-LH	LH Door	26D, US4	1-1/16"	
725RSL-VH	VH Drawer	26D, US4	1-1/16"	
Note: Solid brass cylinder housing available in 26D and US4 finishes only.				

ENCLOSURE LOCK (SQUARE-STYLE, SPRING BOLT)

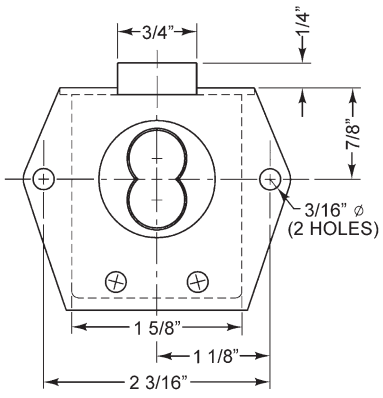

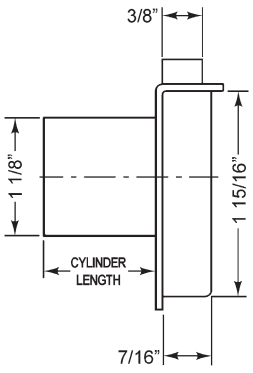

725RSL
(Square Latch) Standard configuration.
Dimensions are the same for all handings.

FOR METAL CABINETS/ENCLOSURES

Locking mechanism (inside of cabinet)

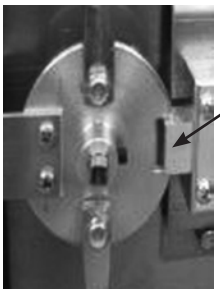

To open cabinet, bolt retracts allowing handle on outside to rotate disk, disengaging top and bottom latching mechanisms. When handle and disk are moved back into the closed position, bolt springs back into slot in disk and the cabinet is locked.

The following warning is applicable to all parts listed on this page:
WARNING: This product can expose you to chemicals including chromium, which is known to the State of California to cause cancer and birth defects or other reproductive harm. for more information go to www.P65Warnings.ca.gov.

Tel: 206.362.3290 | 800.525.0954
Fax 206.362.3569 | www.olympuslock.com

▶ **720** Cam Lock

BEST

For BEST style interchangeable core cylinders



MOUNTING CUTOUT

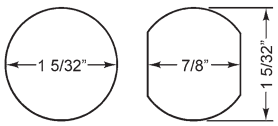



720-PL3
Anti-rotation plate

ANSI/BHMA A156.11 Grade 1 E07261/E07271

Woodwork Institute (WI) acknowledged product

Item	Finish	Body	Cyl. Diameter	Mat. Thickness	Description
720LM/DM	26D, US26, US3, US4	Zinc die cast	1-1/8"	Up to 1-1/8"	Lock body - For small format IC

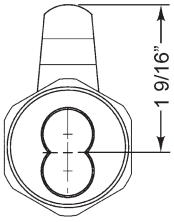

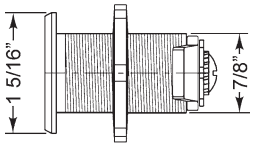

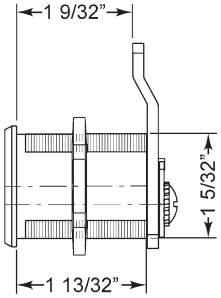

INCLUDED CAMS

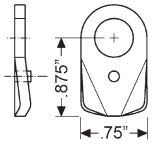

720-3-1
for inverted function

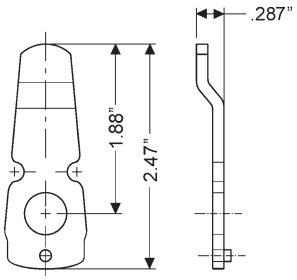

720-3-2
inbent cam for vertical function (bottom-pin style)

SPECIFICATIONS

Retrofits: Best 1E7E4
ANSI/BHMA: Passed ANSI/BHMA A156.11 Grade 1 performance requirements. Equivalent to E07261/E07271.
Cylinder diameter: 1-1/8"
Across flats: 7/8"
Max. material thickness: 1-1/8"
Min. material thickness: 0.08"
Functions: Includes parts for key-retaining or non-key-retaining function
Body: Zinc die cast or machined solid brass
Finish: 26D, US26, US3 or US4
Packaged: Packed 10 per box

KEYING INFORMATION

Cores: Not included.
Accepts: Best, Arrow, Falcon, KSP, Schlage SFIC or equivalent small format interchangeable cores
Compatible electronic cylinders: Medeco Nexgen XT or VIDEX CyberLock SFIC cylinders

INCLUDES

725-PA plastic thumbturn
720-PL3 stabilizer plate
725-1 spacer to fit 6 or 7 pin cores
720-3-1 short inverted cam
720-3-2 long vertical cam
720-CDLM lost motion cam shifter
720-CDDM key retaining door cam shifter
720-KR key retaining drawer cam shifter

OPTIONAL ACCESSORIES

See accessories on page 85-86. See page 86 for cam assembly instructions.

Optional cams: 720-3-3, 720-3-4, 720-3-5
Trim collars: TR200 Series
Switch accessory pack: SW-1
CL-MP-118: Double-D metal punch (page 75)
SFIC cores: 206/207 Series (page 69)

The following warning is applicable to all parts listed on this page:
WARNING: This product can expose you to chemicals including chromium, which is known to the State of California to cause cancer and birth defects or other reproductive harm. for more information go to www.P65Warnings.ca.gov.

▶ **720B-DM** Medical Cart Direct Drive Cam Lock

See also page 58: **724VR** Medical Cart/ File Cabinet lock

BEST

For BEST style interchangeable core cylinders



MOUNTING CUTOUT

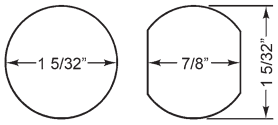

Works with Best original cams.





TR201 1/8"

TR202 1/4"

Item	Finish	Body	Cyl. Diameter	Mat. Thickness	Description
720B-DM	26D	Machined solid brass	1-1/8"	Up to 1-1/8"	Lock body - For small format IC

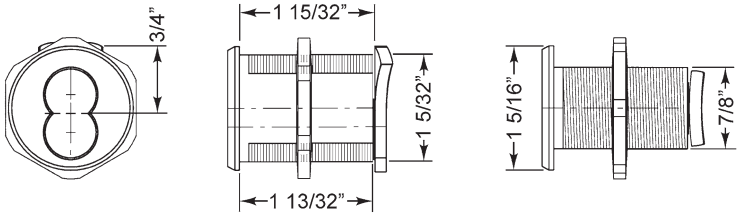

INCLUDED CAM

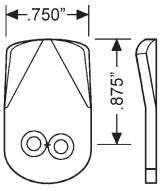

720-3-D1
short cam

OPTIONAL CAM

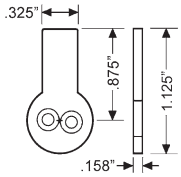

720-3-SC1
switch cam

SPECIFICATIONS

Retrofits: Best 1E7D4
Cams: Will work with Best original cams
Cylinder diameter: 1-1/8"
Across flats: 7/8"
Max. material thickness: 1-1/8"
Min. material thickness: 0.08"
Functions: Direct drive screw on cam mechanism
Handing: LH or RH key-retaining only
Body: Solid machined brass
Finish: 26D
Packaged: Packed 10 per box

KEYING INFORMATION

Cores: Not included.
Accepts: Best, Arrow, Falcon, KSP, Schlage SFIC or equivalent small format interchangeable cores
Compatible electronic cylinders: Medeco Nexgen XT or VIDEX CyberLock SFIC cylinders

INCLUDED ACCESSORIES

725-PA plastic thumbturn
720-3-D1 short direct drive cam
TR201 spacer collar, 1/8"
TR202 spacer collar, 1/4"
725-1 spacer for 6 pin cores

OPTIONAL ACCESSORIES

Cam: 720-3-SC1
Trim collars: TR200 Series
CL-MP-118: Double-D metal punch (page 75)
SFIC cores: 206/207 Series (page 69)

The following warning is applicable to all parts listed on this page:
WARNING: This product can expose you to chemicals including chromium, which is known to the State of California to cause cancer and birth defects or other reproductive harm. for more information go to www.P65Warnings.ca.gov.

Tel: 206.362.3290 | 800.525.0954
Fax 206.362.3569 | www.olympuslock.com

OLYMPUS® LOCK INC

▶ 721DR Deadbolt Lock

BEST

For BEST style interchangeable core cylinders



ANSI/BHMA A156.11 Grade 1 E07121

Woodwork Institute (WI) acknowledged product

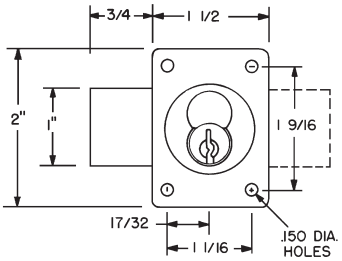

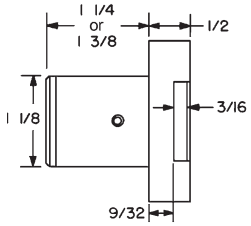

US19 flat black finish now available

721DR-LB

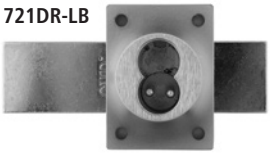

Long bolt option for door configuration

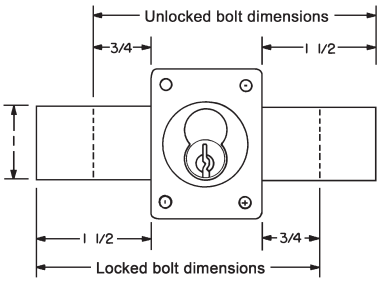

Show in right-hand function. Reverse dimensions for left-hand function.

KEY REMOVABLE LOCKED OR UNLOCKED POSITION

Item	Function	Finish	Cyl. Length	Description
721DR	Door	26D, US26, US3, 10B, US19	1-1/4"	Lock body - For small format IC
721DR-SP1	Door	26D, US26, US3, 10B	1-1/4"	Lock body - For Sargent XC or Marks high security cores. Includes short pin prong driver 721DR-11-SP1
721DR-138	Door	26D	1-3/8"	Lock body - For small format IC
Long bolt	Specify **LB** for long bolt installed in lock. Extends the overall bolt length by 1-1/2".			

KEY RETAINING (KEY REMOVABLE LOCKED POSITION ONLY)

Item	Function	Finish	Cyl. Length	Description
721DR-KR	Door-KR	26D, US26, US3, 10B	1-1/4"	Lock body - For small format IC
721DR-KR138	Door-KR	26D	1-3/8"	
Key-retaining: Cycle to "locked" position before inserting core.				

SPECIFICATIONS

Retrofits: Best 3L
Reversible: Field reversible between door and drawer functions
ANSI/BHMA: Passed ANSI/BHMA A156.11 Grade 1 performance requirements. Equivalent to E07121 (721DR) / E07041 (721DW)
Standard function: Key removable in locked and unlocked position.
Key-retaining function: Key removable in locked position only. Specify ***-KR*** for key-retaining.
US Patent Nos: 4,899,563; 4,920,774
Barrel diameter: 1-1/8"
Cylinder length: 1-1/4" or 1-3/8"
Body: Zinc die cast
Finish: US26, 26D, US3, US10B or US19
Packaged: Packed 10 per box

KEYING INFORMATION

Cores: Not included
Accepts: Best, Arrow, Falcon, KSP, Schlage SFIC or equivalent small format interchangeable cores
Compatible electronic cylinders: Medeco Nexgen XT or VIDEX CyberLock SFIC cylinders

INCLUDED ACCESSORIES

For 1-1/4"barrel length locks:
725-1 spacer to fit 6 or 7 pin cores
725-PA plastic thumbturn
10-350 (qty 3) 1/8" plastic spacers
10-054 1/4" plastic bar strike
10-057 .65" plastic bar strike
For 1-3/8"barrel length locks:
725-1 spacer to fit 6 or 7 pin cores
725-PA plastic thumbturn
10-054 1/4" plastic bar strike

OPTIONAL ACCESSORIES

See the accessories section of this catalog for a complete list.

Spacers: 10-350 (1/8" thick), 10-348 (1/4" thick), 10-349 (1/2" thick)
Strikes: 10-052, 10-055, 10-056, 10-058, 12-2, 12-4
Trim ring: TR78
Through-bolt hardware: ETS1 trim plate, ETS1-PL trim pull and ETST1 template
SFIC cores: 206/207 Series (page 69)
Long bolt only: 721-1-LB

The following warning is applicable to all parts listed on this page:
WARNING: This product can expose you to chemicals including chromium, which is known to the State of California to cause cancer and birth defects or other reproductive harm. for more information go to www.P65Warnings.ca.gov.

▶ **721DW** Drawer Lock

BEST

For BEST style interchangeable core cylinders



ANSI/BHMA A156.11 Grade 1 E07121

Woodwork Institute (WI) acknowledged product

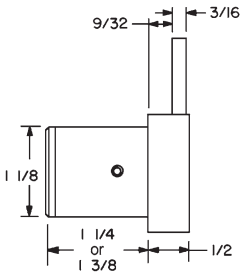

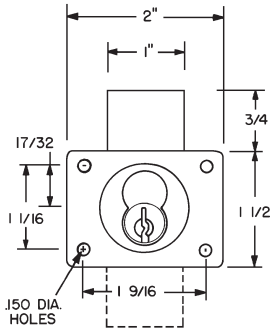

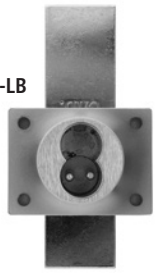

721DW-LB

Long bolt option for drawer configuration

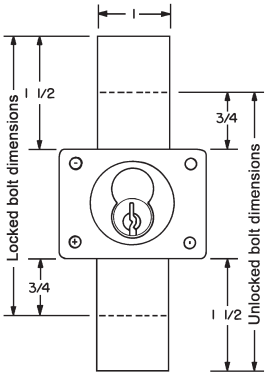

Shown in vertical function. Reverse dimensions for inverted function.

KEY REMOVABLE LOCKED OR UNLOCKED POSITION

Item	Function	Finish	Cyl. Length	Description
721DW	Drawer	26D, US26, US3, 10B, US19	1-1/4"	Lock body - For small format IC
721DW-SP1	Drawer	26D, US26, US3, 10B	1-1/4"	Lock body - For Sargent XC or Marks high security cores. Includes short pin prong driver 721DW-11-SP1
721DW-138	Drawer	26D	1-3/8"	Lock body - For small format IC
Long bolt	Specify **LB** for long bolt installed in lock. Extends the overall bolt length by 1-1/2".			

KEY RETAINING (KEY REMOVABLE LOCKED POSITION ONLY)

Item	Function	Finish	Cyl. Length	Description
721DW-KR	Drawer-KR	26D, US26, US3, 10B	1-1/4"	Lock body - For small format IC
721DW-KR138	Drawer-KR	26D	1-3/8"	
Key-retaining: Cycle to "locked" position before inserting core.				

SPECIFICATIONS

Retrofits: Best 3L
Reversible: Field reversible between door and drawer functions
ANSI/BHMA: Passed ANSI/BHMA A156.11 Grade 1 performance requirements. Equivalent to E07121 (721DR) / E07041 (721DW)
Standard function: Key removable in locked and unlocked position.
Key-retaining function: Key removable in locked position only. Specify ***-KR*** for key-retaining.
US Patent Nos: 4,899,563; 4,920,774
Barrel diameter: 1-1/8"
Cylinder length: 1-1/4" or 1-3/8"
Body: Zinc die cast
Finish: US26, 26D, US3, US10B or US19
Packaged: Packed 10 per box

KEYING INFORMATION

Cores: Not included
Accepts: Best, Arrow, Falcon, KSP, Schlage SFIC or equivalent small format interchangeable cores
Compatible electronic cylinders: Medeco Nexgen XT or VIDEX CyberLock SFIC cylinders

INCLUDED ACCESSORIES

For 1-1/4"barrel length locks:
725-1 spacer to fit 6 or 7 pin cores
725-PA plastic thumbturn
10-350 (qty 3) 1/8" plastic spacers
10-054 1/4" plastic bar strike
10-057 .65" plastic bar strike
For 1-3/8"barrel length locks:
725-1 spacer to fit 6 or 7 pin cores
725-PA plastic thumbturn
10-054 1/4" plastic bar strike

OPTIONAL ACCESSORIES

See the accessories section of this catalog for a complete list.

Spacers: 10-350 (1/8" thick), 10-348 (1/4" thick), 10-349 (1/2" thick)
Strikes: 10-052, 10-055, 10-056, 10-058, 12-2, 12-4
Trim ring: TR78
Through-bolt hardware: ETS1 trim plate, ETS1-PL trim pull and ETST1 template
SFIC cores: 206/207 Series (page 69)
Long bolt only: 721-1-LB

The following warning is applicable to all parts listed on this page:
WARNING: This product can expose you to chemicals including chromium, which is known to the State of California to cause cancer and birth defects or other reproductive harm. for more information go to www.P65Warnings.ca.gov.

Tel: 206.362.3290 | 800.525.0954
Fax 206.362.3569 | www.olympuslock.com

▶ **722S** Plunger Lock

BEST

For BEST style interchangeable core cylinders



722S



722S-TBM
Through-bolt mount

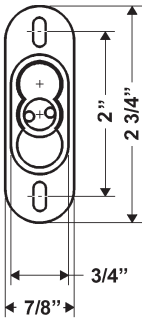

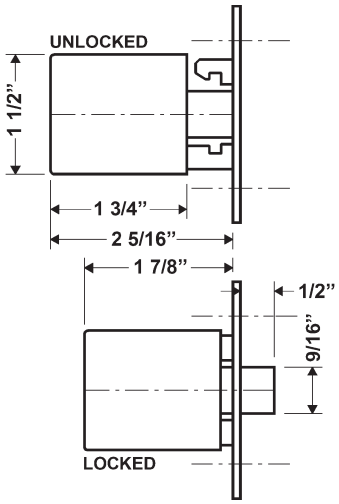

Item	Function	Finish	Description
722S	Standard	26D	Lock body - For small format IC
722S-KR	Key-retaining	26D	
722S-TBM	Standard	26D	Lock body - For small format IC (includes through-bolt mounting hardware)
722S-TBM-KR	Key-retaining	26D	

SPECIFICATIONS

Retrofits: Best 2S, 2S-TBM
Standard function: Key removable in locked and unlocked position.
Key-retaining function: Key removable in locked position only. Specify ***-KR*** for key-retaining.
TBM function: Specify TBM for "through-bolt mounting"
Body: Solid brass
Barrel length: 1-3/4"
Bolt throw: 1/2"
Max. door thickness: 1-7/8"
Min. door thickness (TBM): 5/8"
Finish: 26D
Packaged: Packed 10 per box

KEYING INFORMATION

Cores: Not included
Accepts: Best, Arrow, Falcon, KSP, Schlage SFIC or equivalent small format interchangeable cores
Compatible electronic cylinders: Medeco Nexgen XT or VIDEX CyberLock SFIC cylinders

INCLUDED ACCESSORIES

725-1 spacer to fit 6 or 7 pin cores
Matching strike
725-PA plastic thumbturn
TBM locks include through-bolt plates and screws

OPTIONAL ACCESSORIES

SFIC cores: 206/207 Series (page 69)

▶ **723S** Sliding Door Cylinder Housing

BEST

For BEST style interchangeable core cylinders



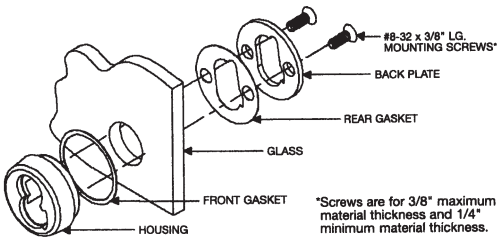

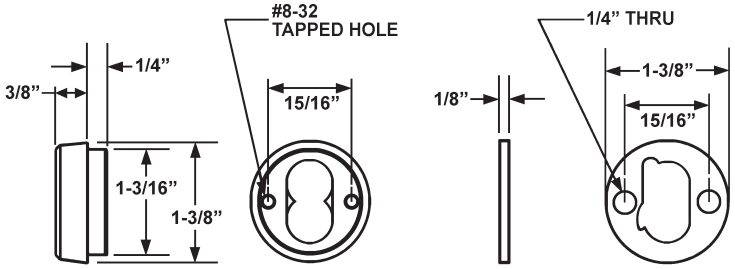

FOR BYPASSING SLIDING GLASS DOORS

Item	Finish	Size	Type	Description
723S	26D, US26	Adjustable	Sliding door cylinder housing	Lock body - For small format IC
Note:	Requires use of 207S series SFIC core			

SPECIFICATIONS

Retrofits: Best 4S
Function: For use on bypassing sliding doors. Core acts as stop for interior sliding door.
Material: Zinc die cast
Finish: 26D or US26

INCLUDED ACCESSORIES

Screws: Includes 3 sizes of screws (7/16", 3/4" and 1") to adapt lock for use on varying material thicknesses

KEYING INFORMATION

Core: Not included, requires special core
Accepts: Best (6C or 6CP), Arrow, Falcon, KSP, Schlage SFIC or equivalent small format interchangeable cores

OPTIONAL ACCESSORIES

SFIC cores: 207S Series (page 69)

207S Series SFIC cores



The Olympus 723S requires use of 207S series SFIC cores (page 69)

The following warning is applicable to all parts listed on this page:
WARNING: This product can expose you to chemicals including chromium, which is known to the State of California to cause cancer and birth defects or other reproductive harm. for more information go to www.P65Warnings.ca.gov.

▶ **724VR** Medical Cart File Cabinet Lock

BEST

For BEST style interchangeable core cylinders



Item	Finish	Description
724VR	26D	Lock body - For small format IC Vertical slot / round bolt
Note: Includes red "caution" flag when unlocked.		

SPECIFICATIONS

Retrofits: Best 2P73
Use: Commonly used as locking device on medical carts (see also our B7 cam lock which is also commonly used on medical carts)
Open indicator: Includes red "caution" flag when unlocked.
Mounting slot: Vertical
Bolt type: Round spring bolt
Material: Zinc die cast
Finish: 26D
Packaged: Packed 10 per box

KEYING INFORMATION

Cores: Not included
Accepts: Best, Arrow, Falcon, KSP, Schlage SFIC or equivalent small format interchangeable cores
Compatible electronic cylinders: Medeco Nexgen XT or VIDEX CyberLock SFIC cylinders

INCLUDED ACCESSORIES

725-1 spacer to fit 6 or 7 pin cores
725-PA plastic thumbturn

OPTIONAL ACCESSORIES

SFIC cores: 206/207 Series (page 69)

▶ **728MBL** Mailbox Lock

BEST

For BEST style interchangeable core cylinders

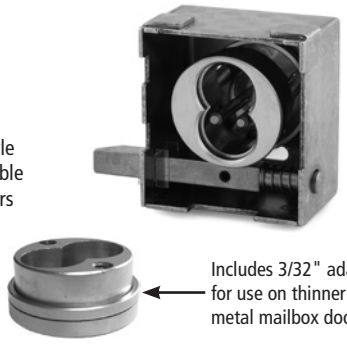

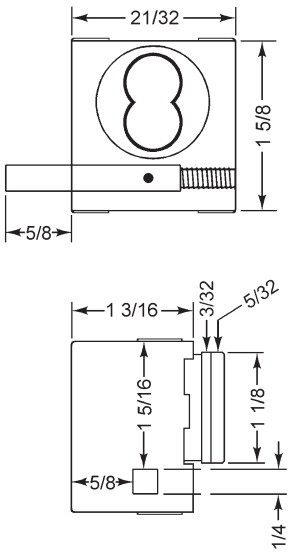

Item	Finish	Size	Description
728MBL	26D	Adjustable	Lock body - For small format IC

SPECIFICATIONS

Retrofits: Best 8L
Handing: RH standard
Installation: Fits most common metal mailbox door designs
Material: Zinc die cast cylinder housing, steel body
Size: Adjustable. Includes 3/32" adapter ring for use on thinner gauge metal mailbox doors.
Finish: 26D
Packaged: Packed 10 per box

KEYING INFORMATION

Cores: Not included
Accepts: Best, Arrow, Falcon, KSP, Schlage SFIC or equivalent small format interchangeable cores
Compatible electronic cylinders: Medeco Nexgen XT or VIDEX CyberLock SFIC cylinders

OPTIONAL ACCESSORIES

SFIC cores: 206/207 Series (page 69)

The following warning is applicable to all parts listed on this page:
WARNING: This product can expose you to chemicals including chromium, which is known to the State of California to cause cancer and birth defects or other reproductive harm. for more information go to www.P65Warnings.ca.gov.

Tel: 206.362.3290 | 800.525.0954
Fax 206.362.3569 | www.olympuslock.com

▶ 725RD Rim Deadbolt

BEST

For BEST style interchangeable core cylinders

Surface Mounted



725RD
725RD-DW-VH



725RD-DR-LH



725RD-DW-IH



725RD-DR-RH

Item	Function	Finish	Cyl. Length	Description
725RD-DR-RH	RH Door	26D, US26, US3, US4, 10B	1-1/16"	Lock body - For small format IC
725RD3DR-RH	RH Door	26D	1-3/8"	
725RD-DR-LH	LH Door	26D, US26, US3, US4, 10B	1-1/16"	
725RD3DR-LH	LH Door	26D	1-3/8"	
725RD-DW-VH	VH Drawer	26D, US26, US3, US4, 10B	1-1/16"	
725RD3DWVH	VH Drawer	26D	1-3/8"	
725RD-DW-IH	IH Drawer	26D, US26, US3, US4, 10B	1-1/16"	
725RD3DW-IH	IH Drawer	26D	1-3/8"	
Below locks are with "key-retaining" function (key removable in locked position only)				
725RD-DWKVH	VH Drawer	26D, US26, US3, US4, 10B	1-1/16"	Lock body - For small format IC
725RD3DWKVH	VH Drawer	26D	1-3/8"	

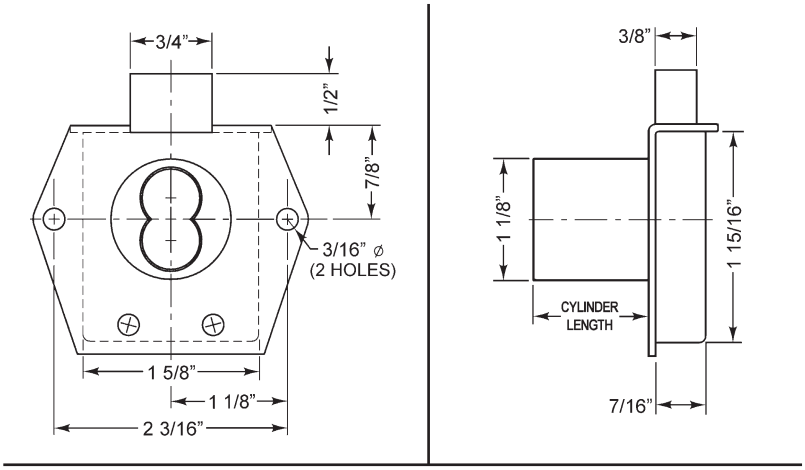

725RD
(Rim Deadbolt) Standard configuration.
Dimensions are the same for all handings.

SPECIFICATIONS

Retrofits: Best 5L7RD
Mounting: Rim (surface)
ANSI/BHMA: Passed ANSI/BHMA A156.11 Grade 1 performance requirements
Material: Zinc die cast cylinder housing, steel back plate and steel case
Cylinder length: 1-1/16" or 1-3/8"
Barrel diameter: 1-1/8"
Key-retaining: Available for DW-VH applications
Finish: US26, 26D, US3, US4 or 10B (1-3/8" barrel length locks available in 26D finish only)
Packaged: Packed 10 per box

KEYING INFORMATION:

Cores: Not included.
Accepts: Best, Arrow, Falcon, KSP, Schlage SFIC or equivalent small format interchangeable cores
Compatible electronic cylinders: Medeco Nexgen XT or VIDEX CyberLock SFIC cylinders

INCLUDED ACCESSORIES

725-1 spacer to fit 6 or 7 pin cores
725-SP-RD solid rectangular strike
725-PA plastic thumbturn

OPTIONAL ACCESSORIES

See the accessories section of this catalog for a complete list.

Spacers: WP725 (1/8" thick), WP726 (1/4" thick)
Strikes: 725-SP Series
SFIC cores: 206/207 Series (page 69)

The following warning is applicable to all parts listed on this page:
WARNING: This product can expose you to chemicals including chromium, which is known to the State of California to cause cancer and birth defects or other reproductive harm. for more information go to www.P65Warnings.ca.gov.

▶ 725RL Rim Latch

BEST

For BEST style interchangeable core cylinders

Surface Mounted



725RL
725RL-DW-VH



725RL-DR-LH



725RL-DR-RH



725RL-DW-IH

SPECIFICATIONS

Retrofits: Best 5L7RL
Mounting: Rim (surface)
ANSI/BHMA: Passed ANSI/BHMA A156.11 Grade 1 performance requirements
Material: Zinc die cast cylinder housing, steel back plate and steel case
Cylinder length: 1-1/16" or 1-3/8"
Barrel diameter: 1-1/8"
Latch projection: 1/4"
Reverse latch: Available for DW-VH or DW-IH functions - use reverse latch for in-swinging door applications.
Finish: US26, 26D, US3, US4 or 10B (1-3/8" barrel length locks available in 26D finish only)
Packaged: Packed 10 per box

KEYING INFORMATION

Cores: Not included.
Accepts: Best, Arrow, Falcon, KSP, Schlage SFIC or equivalent small format interchangeable cores
Compatible electronic cylinders: Medeco Nexgen XT or VIDEX CyberLock SFIC cylinders

INCLUDED ACCESSORIES

725-1 spacer to fit 6 or 7 pin cores
725-SP-RL solid lipped strike
725-PA plastic thumbturn

OPTIONAL ACCESSORIES

See the accessories section of this catalog for a complete list.

Spacers: WP725 (1/8" thick), WP726 (1/4" thick)
Strikes: 725-SP Series
SFIC cores: 206/207 Series (page 69)

Item	Function	Finish	Cyl. Length	Description
725RL-DR-RH	RH Door	26D, US26, US3, US4, 10B	1-1/16"	Lock body - For small format IC
725RL3DR-RH	RH Door	26D	1-3/8"	
725RL-DR-LH	LH Door	26D, US26, US3, US4, 10B	1-1/16"	
725RL3DR-LH	LH Door	26D	1-3/8"	
725RL-DW-VH	VH Drawer	26D, US26, US3, US4, 10B	1-1/16"	
725RL3DWVH	VH Drawer	26D	1-3/8"	
725RL-DW-IH	IH Drawer	26D, US26, US3, US4, 10B	1-1/16"	
725RL3DW-IH	IH Drawer	26D	1-3/8"	
Below locks are with Reverse Latch for "in-swinging" doors				
725RL-DWRVH	VH Drawer	26D, US26, US3, US4, 10B	1-1/16"	Lock body - For small format IC
725RL3DWRVH	VH Drawer	26D	1-3/8"	
725RL-DWRIH	IH Drawer	26D, US26, US3, US4, 10B	1-1/16"	
725RL3DWRIH	IH Drawer	26D	1-3/8"	

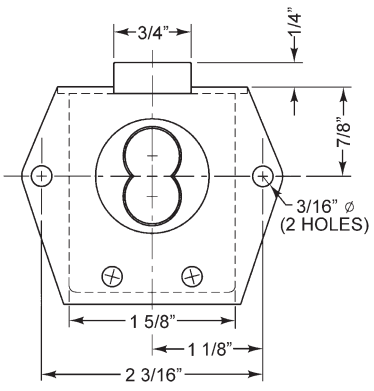

725RL
Dimensions are the same for all handings.

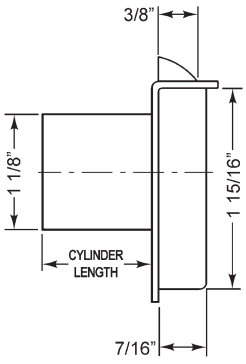

725RL
(Rim Latch)
Standard configuration

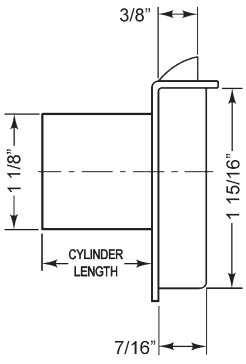

725RL-DWR
(Rim Latch with Reverse Latch Option)
For "in-swinging" doors

The following warning is applicable to all parts listed on this page:
WARNING: This product can expose you to chemicals including chromium, which is known to the State of California to cause cancer and birth defects or other reproductive harm. for more information go to www.P65Warnings.ca.gov.

Tel: 206.362.3290 | 800.525.0954
Fax 206.362.3569 | www.olympuslock.com

▶ 725MD Mortise Deadbolt

BEST

For BEST style interchangeable core cylinders

Mortise Mounted



725MD
725MD-DW-VH



725MD-DR-LH



725MD-DW-IH



725MD-DR-RH

Item	Function	Finish	Cyl. Length	Description
725MD-DR-RH	RH Door	26D, US26, US3, US4, 10B	1-1/16"	Lock body - For small format IC
725MD3DR-RH	RH Door	26D	1-3/8"	
725MD-DR-LH	LH Door	26D, US26, US3, US4, 10B	1-1/16"	
725MD3DR-LH	LH Door	26D	1-3/8"	
725MD-DW-VH	VH Drawer	26D, US26, US3, US4, 10B	1-1/16"	
725MD3DW-VH	VH Drawer	26D	1-3/8"	
725MD-DW-IH	IH Drawer	26D, US26, US3, US4, 10B	1-1/16"	
725MD3DW-IH	IH Drawer	26D	1-3/8"	
Below locks are "key-retaining" (key removable in locked position only)				
725MD-DWKVH	VH Drawer	26D, US26, US3, US4, 10B	1-1/16"	Lock body - For small format IC
725MD3DWKVH	VH Drawer	26D	1-3/8"	

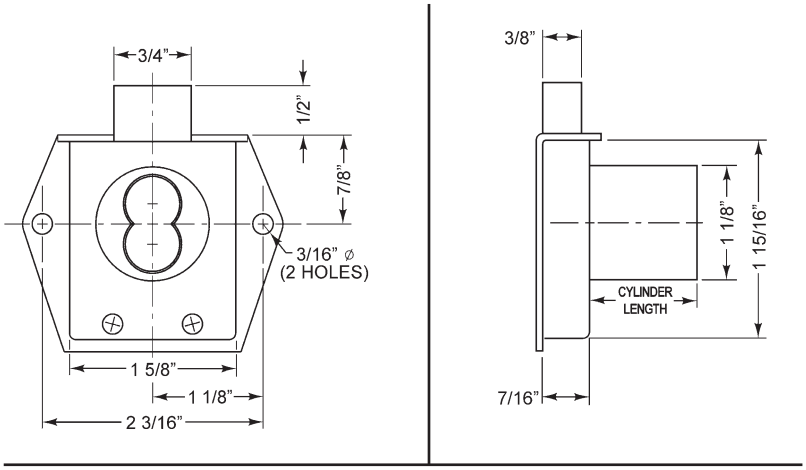

725MD
(Mortise Deadbolt) Standard configuration.
Dimensions are the same for all handings.

SPECIFICATIONS

Retrofits: Best 5L7MD
Mounting: Mortise
ANSI/BHMA: Passed ANSI/BHMA A156.11 Grade 1 performance requirements
Material: Zinc die cast cylinder housing, steel back plate and steel case
Cylinder length: 1-1/16" or 1-3/8"
Barrel diameter: 1-1/8"
Key-retaining: Available for DW-VH applications
Finish: US26, 26D, US3, US4 or 10B (1-3/8" barrel length locks available in 26D finish only)
Packaged: Packed 10 per box

KEYING INFORMATION

Cores: Not included
Accepts: Best, Arrow, Falcon, KSP, Schlage SFIC or equivalent small format interchangeable cores
Compatible electronic cylinders: Medeco Nexgen XT or VIDEX CyberLock SFIC cylinders

INCLUDED ACCESSORIES

725-1 spacer to fit 6 or 7 pin cores
725-SP-MD slotted rectangular strike
725-PA plastic thumbturn

OPTIONAL ACCESSORIES

See the accessories section of this catalog for a complete list.

Spacers: WP725 (1/8" thick), WP726 (1/4" thick)
Strikes: 725-SP Series
SFIC cores: 206/207 Series (page 69)

The following warning is applicable to all parts listed on this page:
WARNING: This product can expose you to chemicals including chromium, which is known to the State of California to cause cancer and birth defects or other reproductive harm. for more information go to www.P65Warnings.ca.gov.

▶ 725ML Mortise Latch

BEST

For BEST style interchangeable core cylinders

Mortise Mounted



725ML
725ML-DW-VH



725ML-DR-LH



725ML-DW-IH



725ML-DR-RH

SPECIFICATIONS

Retrofits: Best 5L7ML
Mounting: Mortise
ANSI/BHMA: Passed ANSI/BHMA A156.11 Grade 1 performance requirements
Material: Zinc die cast cylinder housing, steel back plate and steel case
Cylinder length: 1-1/16" or 1-3/8"
Barrel diameter: 1-1/8"
Reverse latch: Available for DW-VH or DW-IH functions (use reverse latch for in-swinging door applications)
Finish: US26, 26D, US3, US4 or 10B (1-3/8" barrel length locks available in 26D finish only)
Packaged: Packed 10 per box

KEYING INFORMATION

Cores: Not included.
Accepts: Best, Arrow, Falcon, KSP, Schlage SFIC or equivalent small format interchangeable cores
Compatible electronic cylinders: Medeco Nexgen XT or VIDEX CyberLock SFIC cylinders

INCLUDED ACCESSORIES

725-1 spacer to fit 6 or 7 pin cores
725-SP-ML slotted lipped strike
725-PA plastic thumbturn

OPTIONAL ACCESSORIES

See the accessories section of this catalog for a complete list.

Spacers: WP725 (1/8" thick), WP726 (1/4" thick)
Strikes: 725-SP Series
SFIC cores: 206/207 Series (page 69)

Item	Function	Finish	Cyl. Length	Description
725ML-DR-RH	RH Door	26D, US26, US3, US4, 10B	1-1/16"	Lock body - For small format IC
725ML3DR-RH	RH Door	26D	1-3/8"	
725ML-DR-LH	LH Door	26D, US26, US3, US4, 10B	1-1/16"	
725ML3DR-LH	LH Door	26D	1-3/8"	
725ML-DW-VH	VH Drawer	26D, US26, US3, US4, 10B	1-1/16"	
725ML3DW-VH	VH Drawer	26D	1-3/8"	
725ML-DW-IH	IH Drawer	26D, US26, US3, US4, 10B	1-1/16"	
725ML3DW-IH	IH Drawer	26D	1-3/8"	
Below locks are with Reverse Latch for "in-swinging" doors				
725ML-DWRVH	VH Drawer	26D, US26, US3, US4, 10B	1-1/16"	Lock body - For small format IC
725ML3DWRVH	VH Drawer	26D	1-3/8"	
725ML-DWRIH	IH Drawer	26D, US26, US3, US4, 10B	1-1/16"	
725ML3DWRIH	IH Drawer	26D	1-3/8"	

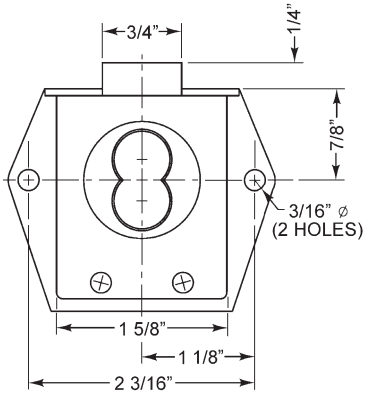

725ML
Dimensions are the same for all handings.

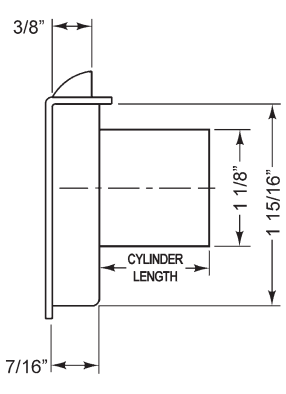

725ML
Mortise Latch
Standard configuration

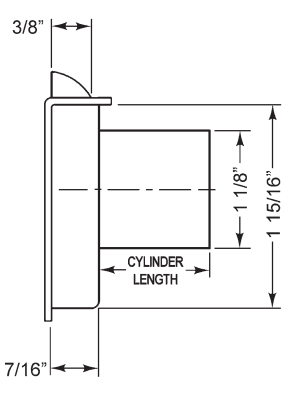

725ML-DWR
Mortise Latch with "Reverse Latch" option for "in-swinging" doors doors

The following warning is applicable to all parts listed on this page:
WARNING: This product can expose you to chemicals including chromium, which is known to the State of California to cause cancer and birth defects or other reproductive harm. for more information go to www.P65Warnings.ca.gov.

Tel: 206.362.3290 | 800.525.0954
Fax 206.362.3569 | www.olympuslock.com

▶ **729R** Showcase/Ratchet Lock

BEST

For BEST style interchangeable core cylinders



Woodwork Institute (WI) acknowledged product

FOR BYPASSING SLIDING DOORS

Item	Finish	Mat. Thickness	Description
729R	26D	Up to 1/4"	Lock body - For small format IC
Optional straps:	729RS-2 fits up to 3/8" material thickness 729RS-3 fits up to 5/8" material thickness (adjustable)		

***Standard and optional straps with nylon coating available August 2019**

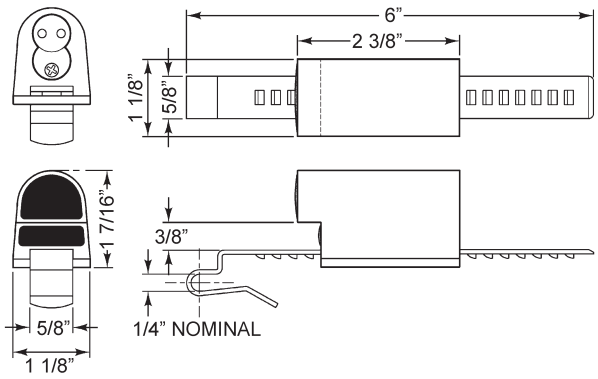

OPTIONAL STRAPS

729RS-2

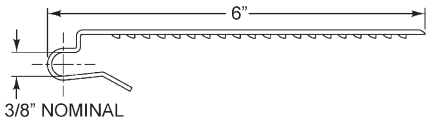

729RS-3

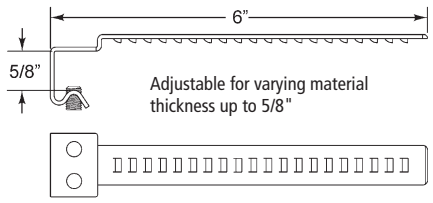

SPECIFICATIONS

Retrofits: Best 3S
ANSI/BHMA: Complies with clause 6.3 (8.2~8.4) of ANSI/BHMA A156.11 ANSI standards
Use: Sliding glass or wood doors
Body: Zinc die cast
Strap: Steel
Finish: 26D
Packaged: Packed 10 per box

KEYING INFORMATION

Cores: Not included.
Accepts: Best, Arrow, Falcon, KSP, Schlage SFIC or equivalent small format interchangeable cores
Compatible electronic cylinders: Medeco Nexgen XT or VIDEX CyberLock SFIC cylinders

INCLUDED ACCESSORIES

729RS-1 strap for 3/16" to 1/4" material thickness
725-1 spacer to fit 6 or 7 pin cores
725-PA plastic thumbturn

OPTIONAL ACCESSORIES

Alternate straps: 729RS-2 strap for 3/8" material thickness, or 729RS-3 strap for up to 5/8" material thickness
SFIC cores: 206/207 Series (Page 69)

The following warning is applicable to all parts listed on this page:
WARNING: This product can expose you to chemicals including chromium, which is known to the State of California to cause cancer and birth defects or other reproductive harm. for more information go to www.P65Warnings.ca.gov.

▶ **L72V** Latch Lock

BEST

For BEST style interchangeable core cylinders



For door applications, place lock on side.

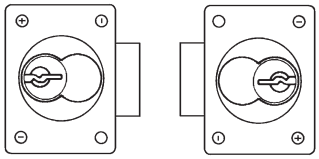

Left-Hand Door | Right-Hand Door

Item	Handing	Finish	Cyl. length	Keying
L72V	VH Drawer	26D, US3	1-1/4"	Lock body - For small format IC
L72V-SP1	VH Drawer	26D, US3	1-1/4"	Lock body - For Sargent XC or Marks high security cores with side pins. Includes short pin prong driver no. L72V-PD-SP1.

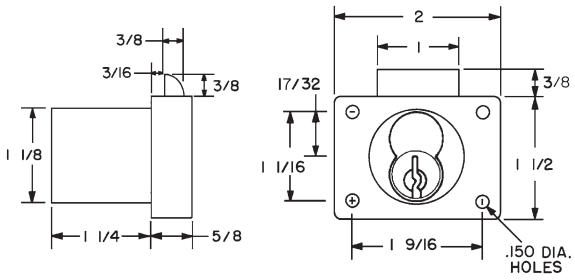

SPECIFICATIONS

Function: Spring latch
Body: Zinc die cast
Barrel diameter: 1-1/8"
Cylinder length: 1-1/4"
Latch projection: 3/8"
Finish: 26D or US3
Packaged: Packed 10 per box

KEYING INFORMATION

Cores: Not included
Accepts: Best, Arrow, Falcon, KSP, Schlage SFIC or equivalent small format interchangeable cores
Compatible electronic cylinders: Medeco Nexgen XT or VIDEX CyberLock SFIC cylinders

INCLUDED ACCESSORIES

10-350 spacers (qty 3)
L78ST-1-SS matching lip strike
725-1 spacer to fit 6 or 7 pin cores
725-PA plastic thumbturn

OPTIONAL ACCESSORIES

See the accessories section of this catalog for a complete list.

Prong drivers: Shortened prong driver for use with Sargent XC or Marks high security cores with side pins. Specify L72V-PD-SP1 (for prong driver only).
Spacers: 10-350 (1/8" thick), 10-348 (1/4" thick), 10-349 (1/2" thick)
Trim ring: TR78
Through-bolt hardware: ETS1 trim plate, ETS1-PL trim pull and ETST1 template
SFIC cores: 206/207 Series (page 69)

▶ **950** Deadlatching Lock

BEST

For BEST style interchangeable core cylinders



Item	Handing	Finish	Cyl. length	Description
950IC	VH Drawer	26D	1-1/8"	Lock body - For small format IC

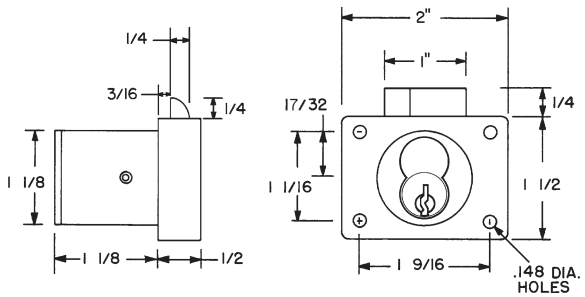

SPECIFICATIONS

Function: Deadlocking latch
U.S. Patent No: 4,899,563; 4,922,774; 5,657,652
Body: Zinc die cast
Cylinder length: 1-1/8"
Barrel diameter: 1-1/8"
Latch projection: 1/4"
Finish: 26D
Packaged: Packed 10 per box

KEYING INFORMATION

Cores: Not included.
Accepts: Best, Arrow, Falcon, KSP, Schlage SFIC or equivalent small format interchangeable cores
Compatible electronic cylinders: Medeco Nexgen XT or VIDEX CyberLock SFIC cylinders

INCLUDED ACCESSORIES

10-350 spacers (qty 2)
725-1 spacer to fit 6 or 7 pin cores
850-210 matching strike
725-PA plastic thumbturn

OPTIONAL ACCESSORIES

See the accessories section for a complete list.

Spacers: 10-350 (1/8" thick), 10-348 (1/4" thick), 10-349 (1/2" thick)
Trim ring: TR78
Through-bolt hardware: ETS1 trim plate, ETS1-PL trim pull and ETST1 template
SFIC cores: 206/207 Series (page 69)

The following warning is applicable to all parts listed on this page:
WARNING: This product can expose you to chemicals including chromium, which is known to the State of California to cause cancer and birth defects or other reproductive harm. for more information go to www.P65Warnings.ca.gov.

Tel: 206.362.3290 | 800.525.0954
Fax 206.362.3569 | www.olympuslock.com

OLYMPUS® LOCK INC

▶ **B7** Cam Lock

BEST

BEST Keyway
(non-SFIC)

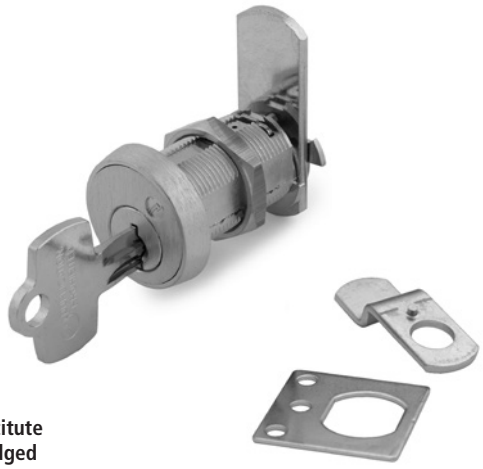

AVAILABLE KEYWAYS

A	B	E	F	G
J	K	L	R	

Woodwork Institute (WI) acknowledged product

Item	Keyway	Finish	Cyl. Length*	Keying
B7	See chart	26D	1-3/16"	O-Bit or Custom Keyed

***Cyl. Length:** As measured with straight cam.

MOUNTING CUTOUT

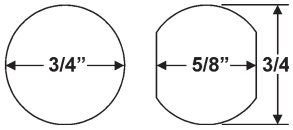

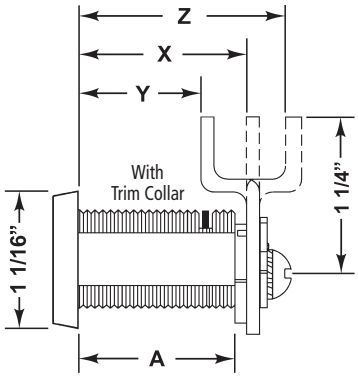

With Trim Collar	
For Mat. Thickness	7/8"
Straight Cam (X)	1-3/16"
Inbent Cam (Y)	7/8"
Outbent Cam (Z)	1-1/2"
Cylinder Length (A)	1-1/8"

INCLUDED PARTS

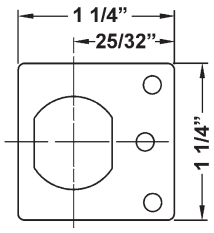

DCNP-500-ARP
anti-rotation plate

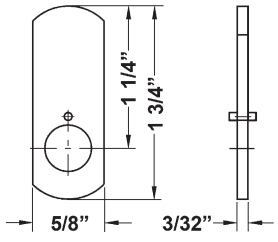

DCNP-100-SC
straight cam

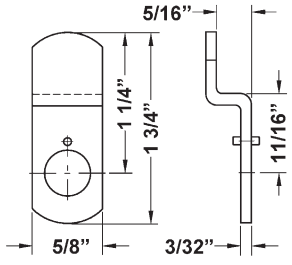

DCNP-100-BC
offset reversible cam

SPECIFICATIONS

Rekeyable: Patented cylinder retainer clip
US Patent Nos: 5,038,589; 5,737,950
Retrofits: Best 5E
Usage: Commonly used as locking device on medical carts (see also our 724VR medical cart/ file cabinet lock for use on medical carts)
Body: Zinc die cast
Cylinder: Zinc die cast pin tumbler, drilled for 7 pins
Standard function: Key removable in locked or unlocked position.
Key retaining function: Alternate key-retaining shifters (page 79) are available separately for key removable in locked position only.
Cams: 2 reversible cams work in all positions
Finish: 26D
Packaged: Packed 10 per box

KEYING INFORMATION

Keyways: A,B,E,F,G,J,K,L,R
Keys: Includes 2 keys per lock
Stock keying: O-Bit
Keying: Custom and/or masterkeying available. Specify at time of order.
Rekeying: Use special pin spring p/n S-SPRING.

INCLUDED ACCESSORIES

Trim collar and parts in chart below.

OPTIONAL ACCESSORIES

See pages 83-84 for a complete list of optional cam sizes and other accessories for use with B7 Series cam locks.

TRB7 SPACER COLLARS AVAILABLE SEPARATELY

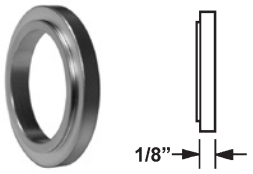

TRB7-18-26D
Spacer collar, 1/8"

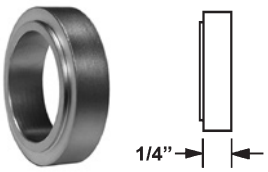

TRB7-14-26D
Spacer collar, 1/4"

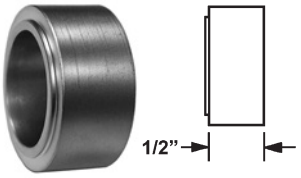

TRB7-12-26D
Spacer collar, 1/2"

The following warning is applicable to all parts listed on this page:
WARNING: This product can expose you to chemicals including chromium, which is known to the State of California to cause cancer and birth defects or other reproductive harm. for more information go to www.P65Warnings.ca.gov.

▶ **SK Series** Sample, Service & Parts Kits



TOP LAYER
Parts and accessories

BOTTOM LAYER
Cabinet lock products



SPECIFICATIONS

Kits contains a sampling of our best selling Olympus cabinet locks and accessories.

SK-002

General Product Line Kit: This kit contains our best selling Olympus cabinet locks and accessories. The kit comes with its own plastic, 2 level case with each product carefully marked and separated by dividers.
See list of contents: olympuslock.com/Pages/Products.html?productList=displaysAndKits

SK-003

SFIC Product Line Kit: This kit contains a sampling of our small format interchangeable core cabinet locks and accessories. The kit comes with its own plastic, 2 level case with each product carefully marked and separated by dividers.
See list of contents: olympuslock.com/Pages/Products.html?productList=displaysAndKits

SK-004

Parts & Accessories Kit: Contains a sampling of our most popular parts and accessories. The kit comes in its own plastic, 2 level case with parts marked and separated by dividers. Provides additional room for extra locks and accessories.
See list of contents: olympuslock.com/Pages/Products.html?productList=displaysAndKits

SK-005

N Series Locks: Contains a sampling of our N Series (National Keyway) cabinet locks and accessories. The kit comes in its own plastic, 2 level case with each product carefully marked and separated by dividers.
See list of contents: olympuslock.com/Pages/Products.html?productList=displaysAndKits

SK-006

Schlage C Keyway Locks: Contains a sampling of our Schlage C Kewyay cabinet locks accessories. The kit comes in its own plastic, 2 level case with each product carefully marked and separated by dividers.
See list of contents: olympuslock.com/Pages/Products.html?productList=displaysAndKits

The following warning is applicable to all parts listed on this page:
WARNING: This product can expose you to chemicals including chromium, which is known to the State of California to cause cancer and birth defects or other reproductive harm. for more information go to www.P65Warnings.ca.gov.

Tel: 206.362.3290 | 800.525.0954
Fax 206.362.3569 | www.olympuslock.com

▶ **BP Series** Mountain Brand Padlocks



Long Shackle | Regular Shackle



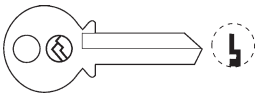

BP SERIES KEYBLANKS

Item	Fits Padlock	Packaged
KB220	BP075	50/box
KB225	BP100	50/box
KB235	BP125	50/box
KB240	BP150/BP175	50/box
KB250	BP200	50/box

SPECIFICATIONS

Body: Solid brass body
Cylinder: Pin tumbler
Shackle: Hardened steel
Internal parts: Brass
Locking: Heel and toe
Keying: Keyed different or keyed alike
Special note on our keyed different padlocks: Keyed different codes are not guaranteed against interchange.
Use: All weather, indoor/outdoor
Keys: Includes 3 keys per lock
Packaged: Blister packed
Sales unit: Sold in full box quantities only.

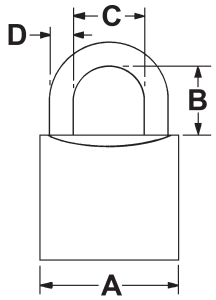

MOUNTAIN BRAND - BLISTER PACKED PADLOCKS

Item	Width	Keying	Shackle	Box Qty.	Box Weight	Case Qty.
BP075	3/4" — 20mm	KD, KA 30	Regular	10	1.1 lbs.	200
BP100	1" — 25mm	KD, KA 40,45	Regular	10	1.1 lbs.	200
BP125	1-1/4" — 30mm	KD, KA 51	Regular	10	2.1 lbs.	100
BP125LS	1-1/4" — 30mm	KD, KA 51,59	Long	10	3.1 lbs.	50
BP150	1-1/2" — 40mm	KD, KA 60,61,65	Regular	10	3.9 lbs.	100
BP150LS	1-1/2" — 40mm	KD, KA 60,65	Long	10	4.7 lbs.	50
BP175	1-3/4" — 45mm	KD, KA 70,75	Regular	5	2.9 lbs.	75
BP200	2" — 50mm	KD, KA 80	Regular	5	3.1 lbs.	75

PADLOCK DIMENSIONS

Item	A	B	C	D
BP075	3/4"	3/8"	3/8"	1/8"
BP100	1"	1/2"	1/2"	5/32"
BP125	1-1/4"	5/8"	5/8"	7/32"
BP125-LS	1-1/4"	2-1/8"	5/8"	7/32"
BP150	1-1/2"	7/8"	7/8"	1/4"
BP150-LS	1-1/2"	2-1/2"	7/8"	1/4"
BP175	1-3/4"	1"	1"	9/32"
BP200	2"	1-1/8"	1"	11/32"

Note: All fractional measurements are approximate.

▶ **CRB200** For Corbin/Russwin IC Cores



Long Shackle | Regular Shackle

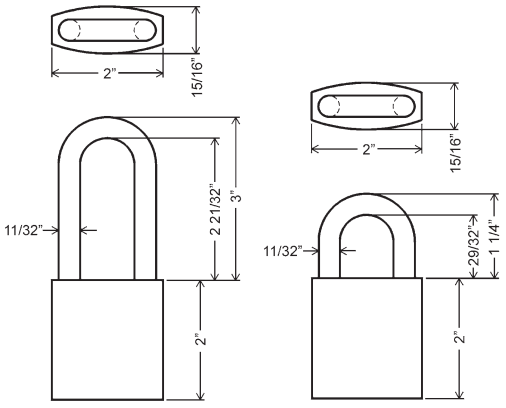

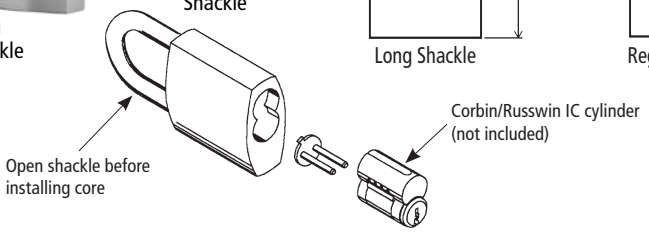

SPECIFICATIONS

Body: Extruded brass
Locking: Ball bearing heel and toe
Body width: 2"
Body height: 2"
Shackle: Stainless steel
Finish: BHMA 606 Satin Brass (US4)

CYLINDER INFORMATION

Cores: Not included
Accepts: Corbin/Russwin 6-pin interchangeable core cylinders
Standard function: Key removable in locked or unlocked position

REGULAR SHACKLE

Shackle opening: 7/8"
Packed: Each
Weight each: 0.68 lbs.

LONG SHACKLE

Shackle opening: 2-5/8"
Packed: Each
Weight each: 0.78 lbs.

Item	Shackle	Keyway
CRB200-IC6	Regular	Accepts Corbin/Russwin 6-pin IC Cylinders
CRB200-IC6-LS	Long	Accepts Corbin/Russwin 6-pin IC Cylinders

The following warning is applicable to all parts listed on this page:
WARNING: This product can expose you to chemicals including chromium, which is known to the State of California to cause cancer and birth defects or other reproductive harm. for more information go to www.P65Warnings.ca.gov.

▶ **N Series** National Keyway Padlocks

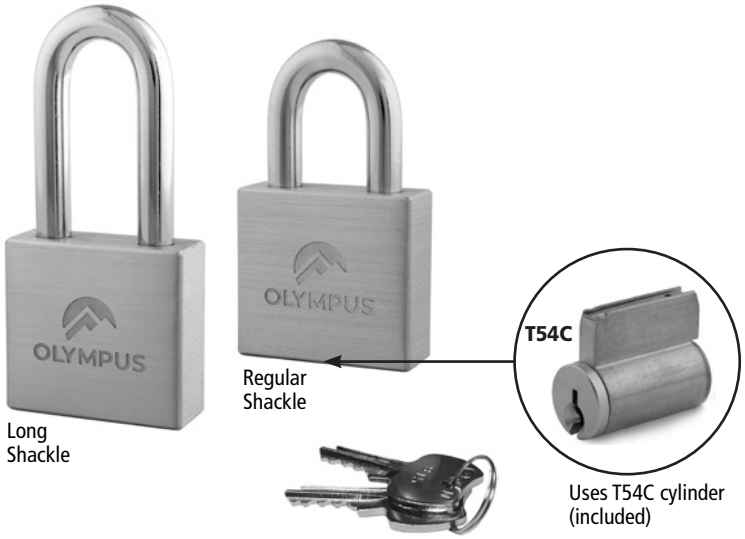

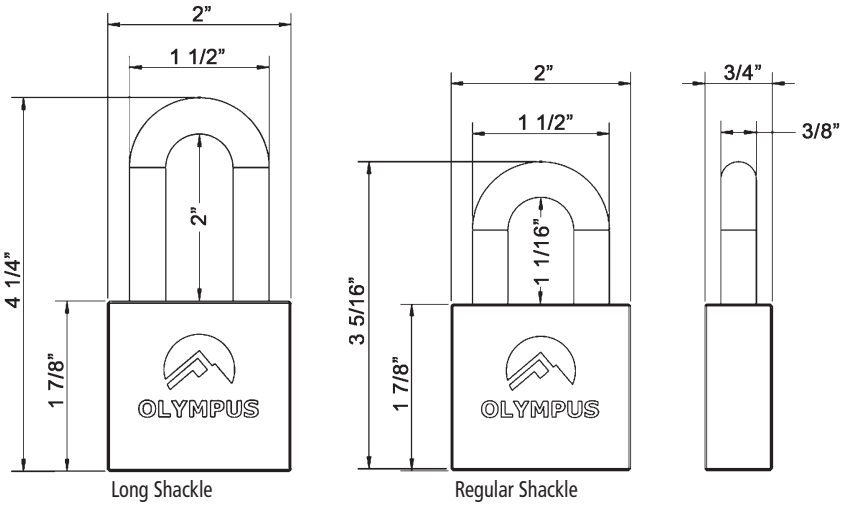

Item	Width	Shackle	Pinning	Keyway
PN50	2"	1-1/16" Opening Regular Shackle	4 Pin 5 Pin	KD, KA 101,103,107,915,51001,51002,51003,51004 Stock master keyed or non stock KD, KA
PN50-LS	2"	2" Opening Long Shackle	4 Pin 5 Pin	KD, KA 101,103,107,915,51001,51002,51003,51004 Stock master keyed or non stock KD, KA

SPECIFICATIONS

Body: Extruded brass
Locking: Ball bearing heel and toe
Body width: 2"
Body height: 1 7/8"
Shackle: Hardened molybdenum steel
Finish: BHMA 606 Satin Brass (US4)
Cylinder: Includes Olympus cylinder #T54C (see page 25 for details)

KEYING INFORMATION

Keyway: National D4291(4-pin) or D4292 (5-pin) keyway
Keys: Includes 2 keys per lock
Stock KD/KA: 4 pin standard
Stock KA#: 101, 103, 107, 915
Stock KA#: 51001 through 51004
Master keyed: 5 pin standard
Pin Kit: Use N1 Pin Kit for rekeying
Keyblanks: 4-pin use KBN-4-NP (equivalent to NA14, 1069L), 5-pin use KBN-5-NP (equivalent to NA12, 1069LA). See page 71 for cut keys and keyblanks.

REGULAR SHACKLE

Shackle opening: 1 1/16"
Shackle diameter: 3/8"
Packed: Each
Weight each: 0.85 lbs.

LONG SHACKLE

Shackle opening: 2"
Shackle diameter: 3/8"
Packed: Each
Weight each: 0.90 lbs.

The following warning is applicable to all parts listed on this page:
WARNING: This product can expose you to chemicals including chromium, which is known to the State of California to cause cancer and birth defects or other reproductive harm. for more information go to www.P65Warnings.ca.gov.

Tel: 206.362.3290 | 800.525.0954
Fax 206.362.3569 | www.olympuslock.com

▶ 206 | 207 SFIC Cylinders





BEST compatible interchangeable core cylinders

AVAILABLE KEYWAYS

A	B	C	D	E	F	G	H
J	K	L	M	Q	1C	1D	

***Note:** Stock keyway is "A". Other keyways may require longer lead times.*

206/207 6 or 7 pin SFIC cores

Item No.	Finish	Description
206-(x*)-(y*) 206-(x*)-(y*)-CUST	26D, US4, 10B*	6 pin core, uncombinated 6 pin core, KA, KD or MK
207-(x*)-(y*) 207-(x*)-(y*)-CUST	26D, US4, 10B*	7 pin core, uncombinated 7 pin core, KA, KD or MK
10B finish available on **A keyway only*		
KB-400K(x*) KB-400K(x*)-CUST		Keyblank for 6 or 7 SFIC pin core Cut key for 6 or 7 SFIC pin core

(x*) = Keyway letter, (y*) = Finish



207S 7 Pin Cores (for use with 723S)

Item No.	Finish	Description
207S-(x*)-(y*) 207S-(x*)-(y*)-CUST	26D, US4	7 pin glass core, uncombinated 7 pin glass core, KA, KD or MK
KB-400K(x*) KB-400K(x*)-CUST		Keyblank for 6 or 7 SFIC pin core Cut key for 6 or 7 SFIC pin core

(x*) = Keyway letter, (y*) = Finish

207S



For use with Olympus 723S

KEY BLANKS & CUT KEYS

Item No.	Type	Description
KB-400K(**x***)	Blank	Keyblank for 6 or 7 pin core
KB-400K(**x***)-CUST	Cut key	Cut key for 6 or 7 pin core
KB-400K(**x***)-CK	Cut key	Cut control key for 6 or 7 pin core
KB-400K(**x***)-MK	Cut key	Cut master key for 6 or 7 pin core
x* = Specify keyway (see below) A,B,C,D,E,F,G,H,J,K,L,M,Q,1C,1D		



SPECIFICATIONS

206 Series: 6 pin core
207 Series: 7 pin core
207S Series: 7 pin core for 723S
Cores: Equivalent to Best, Arrow, Falcon or similar small format interchangeable cores
Standard finish: 26D, US4 or 10B (10B finish available in A keyway only)
Stock keywey: "A" keyway. Other keyways may require longer lead times.
Painted cores: 207 (7 pin only) available in blue (BL), green (GR) or red (RD)

KEYING INFORMATION

Uncombinated: Core only (does not include pins, springs or keys)
Keyed cores: Specify KA, KD or MK.
Keyed cores include 2 change keys per core. 2 additional cut keys (master keys and/or control keys) are shipped with each order and/or project. Additional keys are available separately.
Grand master keying:
Orders ship standard with 2 change keys per core. Includes numeric key code stamped on the change keys. 2 additional cut keys (master keys and/or control keys—specify at time of order) are included with each project. Provide key schedule and full scope of project at time of order and indicate required number of sub master keys for each group. Sub master keys are charged separately. Additional keys are available separately.
Stamping/Engraving: Custom stamping or engraving for cores and keys is available for an additional charge. See price list for details.

OTHER ACCESSORIES

Keys: For additional keys see bottom of this page or key information on page 71.

FOR USE WITH

L72, 720, 721, 722, 723, 724, 725, 728, 729 and 950 SFIC cabinet locks

▶ 207 SFIC Blue, Red & Green Cylinders

207 — BLUE, RED GREEN

Item No.	Color	Description
207-A-BL	BLUE	7 pin, keyed "Blue" (A keyway)
207-A-GR	GREEN	7 pin, keyed "Green" (A keyway)
207-A-RD	RED	7 pin, keyed "Red" (A keyway)

KEY BLANKS & CUT KEYS

Item No.	Color	Description
KB-400KA-BL KB-400KA-BL-CK	BLUE	Cut change key (for BLUE core) Cut control key (for BLUE core)
KB-400KA-GR KB-400KA-GR-CK	GREEN	Cut change key (for GREEN core) Cut control key (for GREEN core)
KB-400KA-RD KB-400KA-RD-CK	RED	Cut change key (for RED core) Cut control key (for RED core)
KB-400KA	Key Blank	7 pin, A keyway key blank for Blue, Red and Green cores

The following warning is applicable to all parts listed on this page:
WARNING: This product can expose you to chemicals including chromium, which is known to the State of California to cause cancer and birth defects or other reproductive harm. for more information go to www.P65Warnings.ca.gov.

▶ **PA Series** Plastic Thumbturns



FOR INTERCHANGEABLE CORE LOCKS

Item	Description
725-PA	Ships standard with small format IC locks: L72V,720,721,722,724,725, 728,729,950 locks Ships standard with Corbin/Russwin IC locks: CR1125,CR25
7788-PA-D	Ships standard with Schlage FSIC locks: L92V,777,888,920,929
931-PA	Ships standard with Medeco/Yale IC locks: 931,ME93,YA93

SPECIFICATIONS

Description: Black or gray plastic thumbturn
Purpose: Operate lock without core
Material: Plastic

▶ **78-201** Schlage C Keyway Cylinders





SCHLAGE style C keyway replacement cylinder

CYLINDER ORDERING GUIDELINES

Item No.	Finish	Universal Driver 10-360 Position		For use with	Keying
78-201H26D-CUST 78-201HUS4-CUST	26D US4	Horizontal		700LC 829R-LC 850S	KA, KD or MK
78-201V26D-CUST 78-201VUS4-CUST	26D US4	Vertical		800LC 820LC	KA, KD or MK
78-201-26D-CUST 78-201-US4-CUST	26D US4	N/A	10-360 driver not required	L78	KA, KD or MK

SPECIFICATIONS

Cylinder: Solid brass, drilled for 6 pins
Finish: US26D or US4 finish
Keyway: Schlage C
Keying: Specify keying at time of order
Use: Works with Olympus less cylinder (for Schlage standard cylinder) cabinet locks
Universal driver: Position of the 10-360 universal driver in the back of the cylinder is dependent on the specific lock the cylinder will be used in. Please see ordering information below.
Cylinder includes: 2 operating keys and 10-360 universal driver, and 1 each 10-361 (1-1/8) and 10-362 (1-3/8) tailpiece/driver bar.

ORDERING INFORMATION

Orientation of universal driver (p/n 10-360) in back of cylinder is based on the Olympus item the cylinder will be used with. See the **For use with** section of the chart opposite for ordering information and cylinder part-numbers.

OTHER ACCESSORIES

Keys: For additional keys, see page 71.

The following warning is applicable to all parts listed on this page:
WARNING: This product can expose you to chemicals including chromium, which is known to the State of California to cause cancer and birth defects or other reproductive harm. for more information go to www.P65Warnings.ca.gov.

Tel: 206.362.3290 | 800.525.0954
Fax 206.362.3569 | www.olympuslock.com

Custom stamping and/or engraving available — See price list for complete details.

For **Cascade Series**, **Combi-Cam**, or **BP Series Padlocks** keys, see related product page in this catalog.

▶ N Series Keys

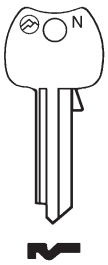

KEY BLANKS

KBN-4-NP	National D4291 keyway - 4 pin key blank Equivalent to NA14, 1069L
KBN-5-NP	National D4292 keyway - 5 pin key blank Equivalent to NA12, 1069LA
KBN-5B	National D4291 keyway - 5 pin key blank (copper plated for 100M/200M MRI locks)

CUT KEYS

KB-101-NP KB-103-NP KB-107-NP KB-915-NP	Cut key for KA #101 Cut key for KA #103 Cut key for KA #107 Cut key for KA #915
KBN-4-CUST	Custom cut 4-pin key
KBN-5-CUST	Custom cut 5-pin key
KBN-5B-CUST	Custom cut 5-pin key (copper plated for 100M/200M Series MRI locks)

MASTER KEYS

KB-GM1MK-NP	Cut master key for GM1 (4-pin) master key system
KB-GM2MK-NP	Cut master key for GM2 (5-pin) master key system
KB-GM3MK-NP	Cut master key for GM300 (5-pin) master key system
KB-GM2MK-5B	Cut master key for GM2 (5-pin) MRI master key system

▶ SFIC/B7 Keys



For BEST compatible interchangeable core cylinders

KEY BLANKS

KB-400K(x*)	Keyblank for 6 or 7 pin core
x* = Specify keyway (see below) A,B,C,D,E,F,G,H,J,K,L,M,Q,1C,1D	

CUT KEYS

KB-400K(x*)-CK	Cut control key for 6 or 7 pin core
KB-400K(x*)-CUST	Cut key for 6 or 7 pin core
x* = Specify keyway (see below) A,B,C,D,E,F,G,H,J,K,L,M,Q,1C,1D	

AVAILABLE KEYWAYS

A	B	C	D	E	F	G	H
J	K	L	M	Q	1C	1D	

▶ R Series Keys

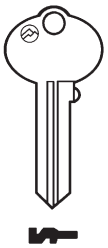

KEY BLANKS

KBR-5-NP	CCL R1 keyway - 5 pin key blank Equivalent to CO106, 1003A
KBR-5B	CCL R1 keyway - 5 pin key blank (copper plated for 500M/600M MRI locks)
KBR-6-NP	CCL R1 keyway - 6 pin key blank Equivalent to L1003A

CUT KEYS

KB-4T2-NP KB-4T3-NP	Cut key for KA #4T21579 Cut key for KA #4T37526
KBR-5-CUST	Custom cut 5-pin key
KBR-5B-CUST	Custom cut 5-pin key (copper plated for 500M/600M MRI locks)
KBR-6-CUST	Custom cut 6-pin key

MASTER KEYS

KB-R1MK-NP	Cut master key for R1 (5-pin) master key system
KB-R1MK-5B	MRI (copper plated) cut master key for R1 (5-pin) master key system

▶ CR/GR Series Keys

For use with E5D / E5L enclosure locks.



KEY BLANKS

KBCR-5-NP	CCL **CR** keyway - 5 pin key blank Equivalent to CCL no. S8690-CR (5-pin)
KBGR-5-NP	CCL **GR** keyway - 5 pin key blank Equivalent to CCL no. S8690-GR (5-pin)

CUT KEYS

KBCR-KA2-NP	**CR** keyway, cut key for KA #2
KBCR-5-CUST	**CR** keyway, custom cut 5-pin key
KBGR-401-NP	**GR** keyway, cut key for KA #401
KBGR-5-CUST	**GR** keyway, custom cut 5-pin key

▶ Schlage C Keys

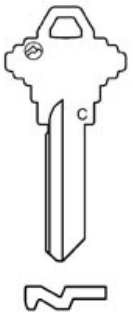

KEY BLANKS

KBSC-6-NP	Schlage C keyway - 6 pin key blank

CUT KEYS

KB-700-101 KB-700-102	Cut key for KA#101 Cut key for KA#102
KB-700-CUST	Custom cut key for Schlage C keyway

MASTER KEYS

KB-700MK	Cut master key for Schlage C (6-pin) master key system

The following warning is applicable to all parts listed on this page:
WARNING: This product can expose you to chemicals including chromium, which is known to the State of California to cause cancer and birth defects or other reproductive harm. for more information go to www.P65Warnings.ca.gov.



Made in USA



▶ **N1 Kit** For N Series Locks

Item	Description	Qty/pkg.
OC3730	Driver #1	100
OC3731	Driver #2	100
OC3732	Driver #3	100
OC3733	Driver #4	100
OC3740	Master driver #2	100
OC3741	Master driver #3	100
OC3742	Master driver #4	100
OC3743	Master driver #5	100
OC3744	Master driver #6	100
OC3745	Master driver #7	100
OC3746	Master driver #8	100
OC3747	Master driver #9	100

Additional pins available (100 pcs. per pkg.)
Specify item number above when ordering replacement pins.

Item	Description	Qty/pkg.
OC3750	Tumbler #0	100
OC3751	Tumbler #1	100
OC3752	Tumbler #2	100
OC3753	Tumbler #3	100
OC3754	Tumbler #4	100
OC3755	Tumbler #5	100
OC3756	Tumbler #6	100
OC3757	Tumbler #7	100
OC3758	Tumbler #8	100
OC3759	Tumbler #9	100
OC3737	Tumbler springs	100
S100	Set screws	10
FL1	Plug follower	1 ea.

SPECIFICATIONS

Keyway: N Series (National D4291/D4292 Keyway)
Pins: Color coded, .101 diameter brass pins

USE WITH

100, 200, 300, 329, 998, 999, FC10, L20V, N078, T37, T54C, DCN1,2,3,4

EACH KIT INCLUDES

100 each: Drivers 1 through 4
100 each: Master drivers 2 through 9
100 each: Tumblers 0 through 9
100 each: Tumbler springs
10 each: Set screws
1 each: Plug follower

▶ **R1 Kit** For R Series Locks

Item	Description	Qty/pkg.
X025	Master pin #2	100
X038	Master pin #3	100
X050	Master pin #4	100
X063	Master pin #5	100
X075	Master pin #6	100
X088	Master pin #7	100
X100	Master pin #8	100
X113	Master pin #9	100
W111	Bottom pin #0	100
W123	Bottom pin #1	100
W136	Bottom pin #2	100
W148	Bottom pin #3	100
W161	Bottom pin #4	100
W173	Bottom pin #5	100
W186	Bottom pin #6	100
W198	Bottom pin #7	100
W210	Bottom pin #8	100
W223	Bottom pin #9	100

Item	Description	Qty/pkg.
X155	Driver #0	100
X088	Driver #5	100
OC3737	Tumbler springs	100
S100	Set screws	10
FL1	Plug follower	1 ea.

Additional pins available (100 pcs. per pkg.)
Specify item number above when ordering replacement pins.

SPECIFICATIONS

Keyway: R Series (CCL R1 Keyway)
Pins: Color coded, .095 diameter brass pins, Olympus B4R ball end bottom pins, type B4R & 4R master pins

USE WITH

500, 600, 400, 429, 996, 997, R078, DCR1,2,3,4

EACH KIT INCLUDES

100 each: Master pins 2 through 9
100 each: Bottom pins 0 through 9
100 each: Drivers 0 and 5
100 each: Tumbler springs
10 each: Set screws
1 each: Plug follower

The following warning is applicable to all parts listed on this page:
WARNING: This product can expose you to chemicals including chromium, which is known to the State of California to cause cancer and birth defects or other reproductive harm. for more information go to www.P65Warnings.ca.gov.

Tel: 206.362.3290 | 800.525.0954
Fax 206.362.3569 | www.olympuslock.com

▶ **FDB Series** Display Boards

SPECIFICATIONS

This valuable resource demonstrates the variety of pin-tumbler cabinet locks available from Olympus Lock. Each lock is mounted so it can be functionally tested. Boards are made of particle board with plastic laminate and are free-standing for countertop display (except FDB-005). Specific finishes or locks may be requested at time of order.



FDB-001



FDB-005



FDB-006



FDB-002

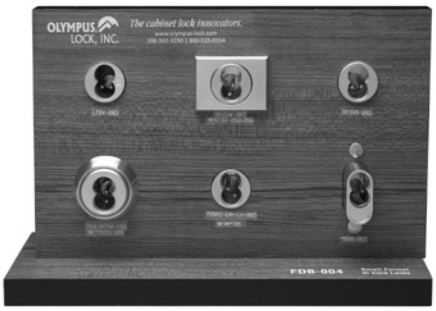

FDB-004



FDB-003

FDB-001
PRODUCT LINE OVERVIEW
Includes a sampling of each product family: Large pin, small pin, interchangeable core, padlockable cam locks.
Includes the following locks: DCP500, 100DR, DCN2 w/DCNP pull, L78V, DCP, 725RL, 300SD, 700S, N078, 888, 729R w/729RS-3

FDB-002
SMALL PIN LOCKS
Includes a sampling of our small pin N Series or R Series locks.
Includes the following locks: 100DR, 200DW w/ETS2, 998V, N078, 300SD, DCN1

FDB-003
SCHLAGE FULL-SIZE IC + LARGE PIN LOCKS
Includes a sampling of our large pin and/or Schlage full-size interchangeable core locks.
Includes the following locks: 700S, L92V w/ETS1, 800S, 820SC w/ TR203, 777, 920 w/TR203

FDB-004
SMALL FORMAT IC LOCKS
Includes a sampling of our small format interchangeable core locks.
Includes the following locks: L72V, 721DW w/ETS1, 721DR, 720, 725RD, 722S

FDB-005
SAMPLE STICK
This small board is easy to carry and includes our best selling items.
Includes the following locks: 720 w/ TR203, 721DW w/ETS1, DCN1, 100DR, DCP500

FDB-006
SAMPLE STICK
This small board is easy to carry and includes: **DCN, 100DR w/ETS2 and DCP500**

FDB-010
CASCADE SERIES DISC TUMBLER
This small board is easy to carry and includes: **953, 954, 955, 960 and 961 disc tumbler cam locks. Includes standoffs for free standing counter display or hole for wall mounting.**

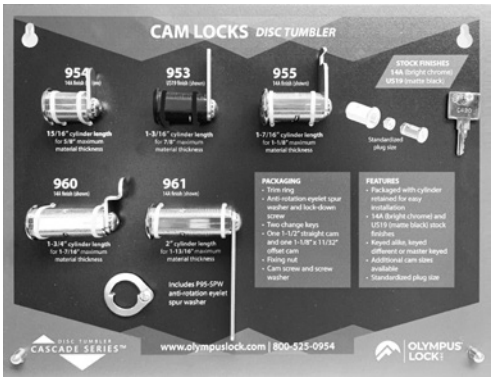

FDB-010

The following warning is applicable to all parts listed on this page:
WARNING: This product can expose you to chemicals including chromium, which is known to the State of California to cause cancer and birth defects or other reproductive harm. for more information go to www.P65Warnings.ca.gov.

▶ TR1256 | TR78 Trim Rings



TR1256
Fits 7/8" diameter cabinet locks

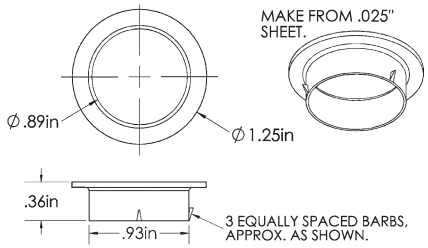

Use of **TR1256** requires 15/16" diameter hole.



TR78
Fits 1-1/8" diameter cabinet locks

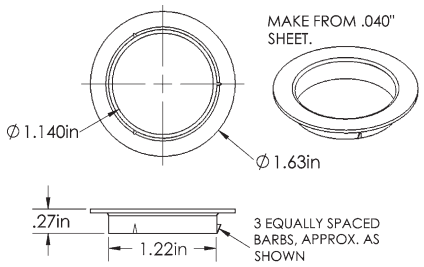

Use of **TR78** requires 1-3/16" diameter hole.

SPECIFICATIONS

Trim rings cover chips or gouges in the laminate or wood hole that can be seen from the outside of the cabinet. They and are used primarily to enhance the appearance of the overall lock installation.

TR1256

Fits: 7/8" diameter cabinet locks
Drilled hole size: 15/16"
Material: Brass
Finish: 26D, US4, 10B or US19
Use with: 100, 200, N078, 999, 998, 500, 600, R078, 997, 996, L20V

TR78

Fits: 1-1/8" diameter cabinet locks
Drilled hole size: 1-3/16"
Material: Brass
Finish: 26D, US3, 10B or US19
Use with: 700, 800, 850, 950, 721, 725, 754, 854, 777, 888, 931, L72, L78, L92

▶ 102 Series Oval Wire Pull





Pull can be used in door or drawer configuration.

Item No.	Finish	Description
102-015-96SC 102-015-96	26D US3	3 3/4" satin chrome pull 3 3/4" polished brass pull
102-015-4SC	26D	4" satin chrome pull

▶ EC Series Elbow Catch



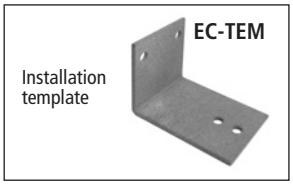

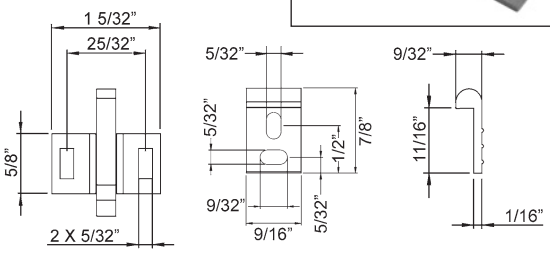

Item No.	Finish	Description
EC-1	26D	Elbow catch and strike components bulk packed separately without mounting screws
EC-2	26D	Elbow catch and strike packaged individually with mounting screws
EC-TEM		Elbow catch installation template/jig

Meets ANSI/BHMA A156.9 B33023
Woodwork Institute (WI) acknowledged product

▶ SB-3 Slide Bolt



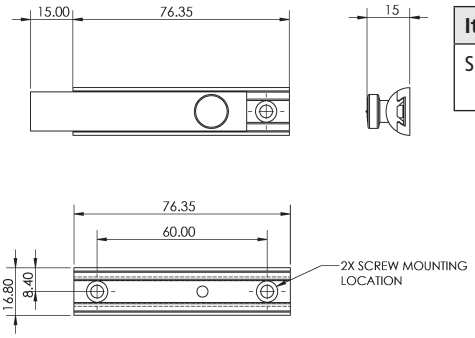

Item No.	Finish	Description
SB-3	US26	3" Slide Bolt (Distributor Pack), packaged individually with 4 screws

The following warning is applicable to all parts listed on this page:
WARNING: This product can expose you to chemicals including chromium, which is known to the State of California to cause cancer and birth defects or other reproductive harm. for more information go to www.P65Warnings.ca.gov.

Tel: 206.362.3290 | 800.525.0954
Fax 206.362.3569 | www.olympuslock.com

▶ **Spacers** For 7/8" diameter locks

WP20 3/16" thickness
Use with 100, 200, 500, 600, L20V, N078, R078

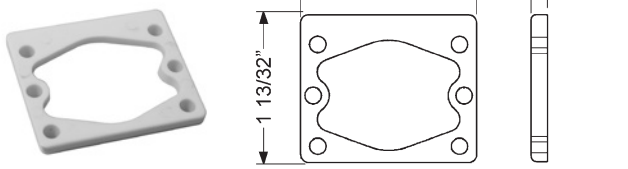

WP21 3/32" thickness
Use with 100, 200, 500, 600, L20V, N078, R078

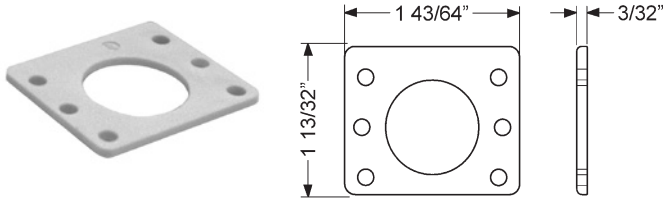

WP22 1/4" thickness
Use with 100, 200, 500, 600, L20V, N078, R078

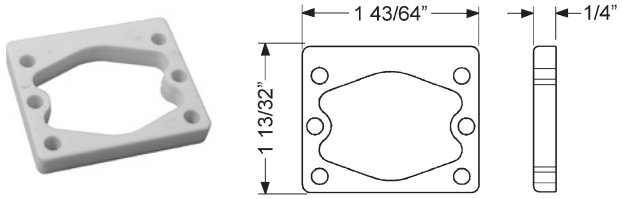

WP23 1/2" thickness
Use with 100, 200, 500, 600, L20V, N078, R078

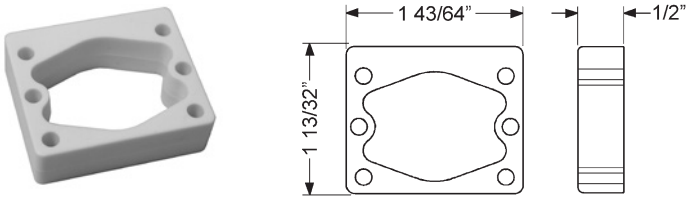

WP24 1/8" thickness
Use with 996, 997, 998, 999

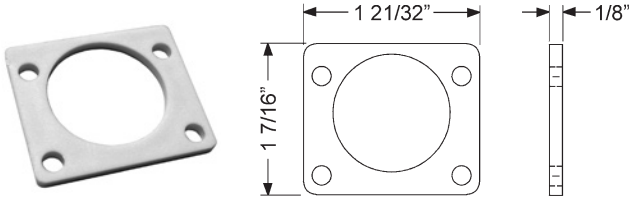

▶ **CL-HIT-25** Cabinet Lock Drill Guide



SPECIFICATIONS

Rubber lined jaws: Protect cabinet doors and give greater holding power.
Adjustable stop: For repeat installations on the same cabinet door.
Maximum thickness: Works on doors up to 1-1/2" thick.
Hole location: Locate the cylinder hole up to 2-5/8" from the edge of the door.
Five sizes of drill bushings for versatility:
3/4", 7/8", 1", 1-1/8" and 1-1/4".
These bushings are designed to be used with clean cutting Forstner type drill bits and are not compatible with hole saws, paddle, or spade-type bits.

▶ **CL-MP-118** Double D Metal Punch

For 1-1/8" diameter cam locks



SPECIFICATIONS

Hole type: Punches a DOUBLE "D" hole in sheet metal cabinet drawers and doors.
Metal type: Use on metal cabinets or any type of sheet metal door made with 18 gauge (.048) or lighter steel.
To use: Drill a 3/4" hole centered where the cam lock is to be installed, slide the punch through the hole and tighten down the hex nut with a 11/16" wrench or socket set.
Hole size: Punches a DOUBLE "D" hole size approximately 7/8" wide by 1-1/8" high.
For use with: 1-1/8" diameter Olympus cabinet locks 720, 820, 920, CR25 ME93, SA54 and YA93.

The following warning is applicable to all parts listed on this page:
WARNING: This product can expose you to chemicals including chromium, which is known to the State of California to cause cancer and birth defects or other reproductive harm. for more information go to www.P65Warnings.ca.gov.

▶ **Spacers** For 1-1/8" diameter locks

10-348 1/4" thickness
Use with 700, 721, 754, 777, 800, 850, 854, 888, 931, 950, L92, L72

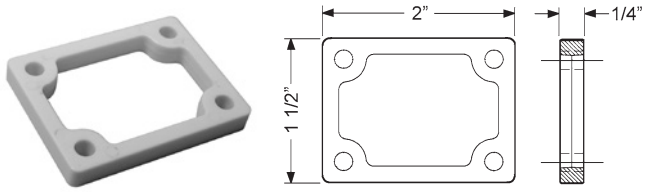

10-349 1/2" thickness
Use with 700, 721, 754, 777, 800, 850, 854, 888, 931, 950, L92, L72

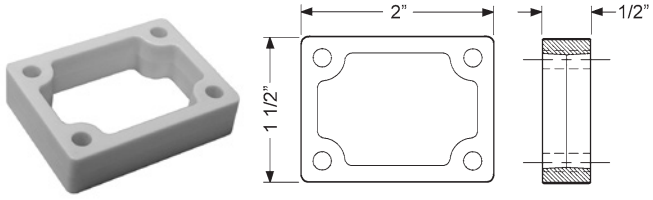

10-350 1/8" thickness
Use with: 700, 721, 754, 777, 800, 850, 854, 888, 931, 950, L92, L72

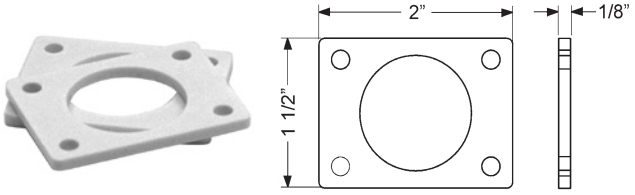

10-351 1/8" thickness
Use with: L78

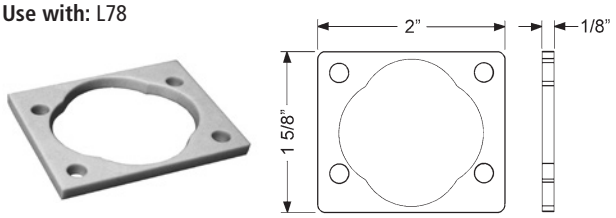

WP725 1/8" thickness
Use with: 725RD, 725RL, CR1125

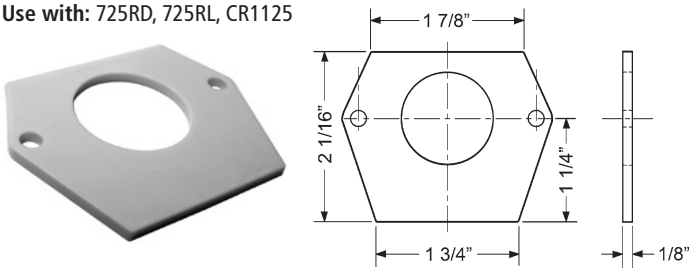

WP726 1/4" thickness
Use with: 725RD, 725RL, CR1125

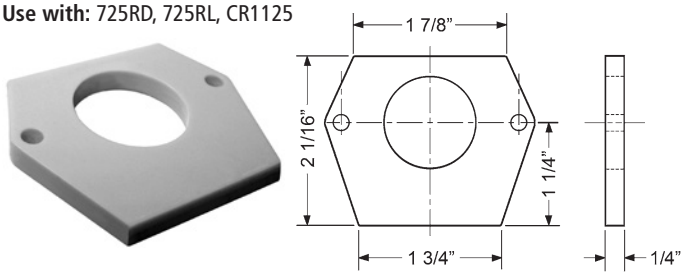

The following warning is applicable to all parts listed on this page:
WARNING: This product can expose you to chemicals including chromium, which is known to the State of California to cause cancer and birth defects or other reproductive harm. for more information go to www.P65Warnings.ca.gov.

Tel: 206.362.3290 | 800.525.0954
Fax 206.362.3569 | www.olympuslock.com

▶ **ETS Series** Through-bolt mounting hardware

ETS SERIES (a)

Exterior through-bolt plate

Attractive mounting: External metal through-bolt plate *figure (a)* allows for flush mounting of the cabinet lock face with face of cabinet

Increases security: Reinforces the cabinet face by direct connection of lock mounting screws to through-bolt plate's binder posts

Available finishes: US3 and 26D

Includes: Mounting screws

ETST SERIES (b)

Spacer/template for through-bolt plate

Mounting guide: The spacer/template *figure (b)* allows for proper mounting hole placement of external through-bolt plate

Spacer: Can be used as a 1/8" shim spacer

Available finishes: US3 and 26D

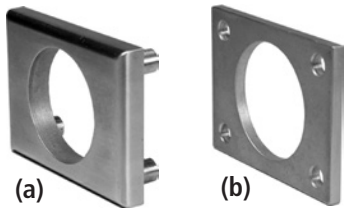

Through-bolt plates and spacer/templates increase security by providing through-bolt mounting of Olympus cabinet locks.
U.S. Patent No. D490,686 S

▶ ETS1 | ETST1

For use with 700, 721, 754, 777, 800, 850, 854, 888, 931, 950, L72V, L92V

Item	Finish	Description
ETS1-125	26D, US3	1/8" thick through-bolt plate
ETS1-250	26D, US3	1/4" thick through-bolt plate
ETST1	26D, US3	Through-bolt plate spacer/template



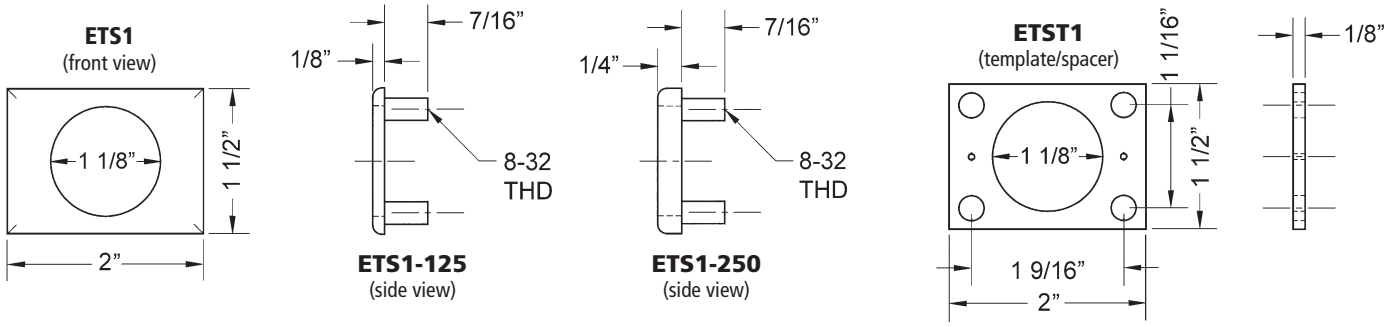

▶ ETS2 | ETST2

For use with 100, 200, 500, 600, L20V

Item	Finish	Description
ETS2-125	26D, US3	1/8" thick through-bolt plate
ETS2-250	26D, US3	1/4" thick through-bolt plate
ETST2	26D, US3	1/8" spacer/template

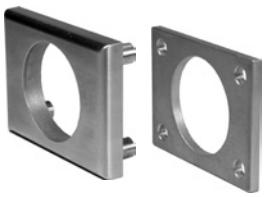

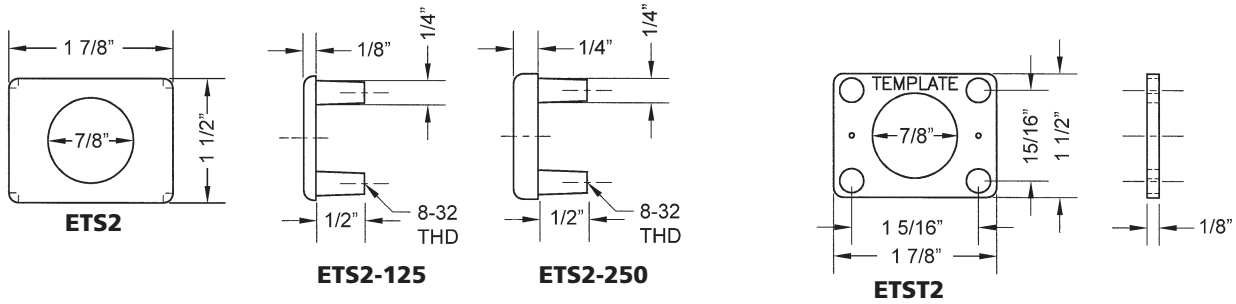

The following warning is applicable to all parts listed on this page:
WARNING: This product can expose you to chemicals including chromium, which is known to the State of California to cause cancer and birth defects or other reproductive harm. for more information go to www.P65Warnings.ca.gov.

▶ **ETS1-PL** Pull for 1-1/8" diameter locks

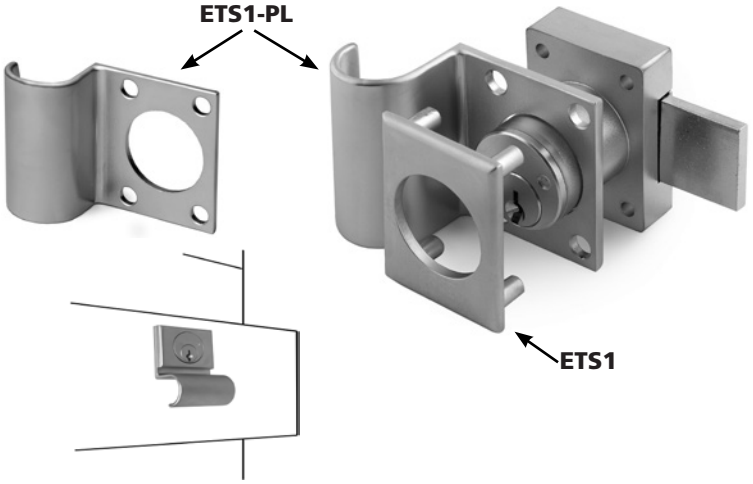

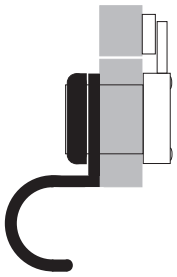

Flush mount with spacer and pull on front of cabinet

SPECIFICATIONS

Mounting: The ETS1-PL cabinet pull fits between our ETS1 through-bolt plate and the face of the cabinet. If mounted "pull down" in drawer applications, the pull will protect the face of the cabinet from the wear and tear of hanging keys.

Through-bolt security: When combined with the ETS1 through-bolt plate, they provide through-bolt mounting of the cabinet lock and pull in a single unit.

Function: Works for both door or drawer applications

Compatible with: Existing ETS1 hardware and screws

Available finishes: US3 and US26D

Use with 1-1/8" barrel diameter locks: 700, 721, 754, 777, 800, 850, 854, 888, 931, 950, L92V, L72V

Item	Finish	Description	Use With
ETS1-PL	26D, US3	1/8" thick pull	700, 721, 754, 777, 800, 850, 854, 888, 931, 950, L92V, L72V
ETS1-125	26D, US3	1/8" thick through-bolt plate	
ETS1-250	26D, US3	1/4" thick through-bolt plate	

Note: ETS1-PL requires use of ETS1-125 or ETS2-250

▶ **ETS2-PL** Pull for 7/8" diameter locks

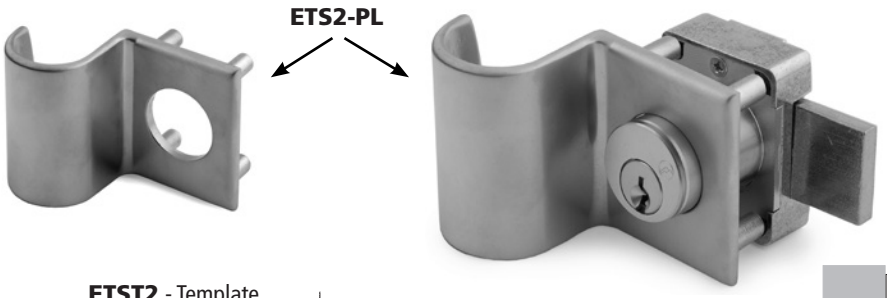

ETST2 - Template

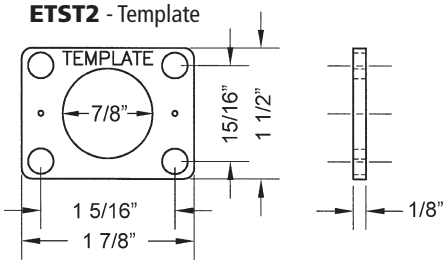

It is recommended that you use the ETST2 spacer/template for proper placement and drilling of mounting holes prior to installation.

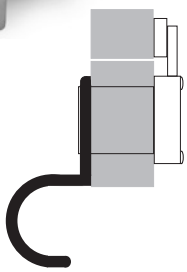

Flush mount with spacer and pull on front of cabinet

SPECIFICATIONS

Mounting: The ETS2-PL cabinet pull is mounted on the face of the cabinet and provides through-bolt mounting of the cabinet lock and pull in a single unit. If mounted "pull down" in drawer applications, the pull will protect the face of the cabinet from the wear and tear of hanging keys.

Function: Works for both door or drawer applications. Does not require use of ETS2 through-bolt plate. Works with existing ETST2 through-bolt spacer/template.

Available finishes: US3 and US26D

Use with 7/8" barrel diameter locks: 100, 200, 500, 600, L20V

Item	Finish	Description	Use With
ETS2-PL	26D, US3	1/8" thick pull	100, 200, 500, 600, L72V
ETST2	26D, US3	1/8" thick through-bolt plate	

The following warning is applicable to all parts listed on this page:
WARNING: This product can expose you to chemicals including chromium, which is known to the State of California to cause cancer and birth defects or other reproductive harm. for more information go to www.P65Warnings.ca.gov.

Tel: 206.362.3290 | 800.525.0954
Fax 206.362.3569 | www.olympuslock.com

▶ Strikes

10-052 Slotted strike
Finish: 26D or US3



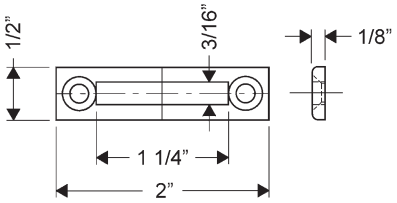

10-054 1/4" bar strike
Finish: White plastic

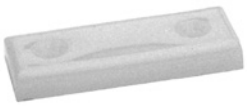

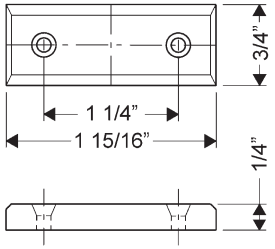

10-055 1/2" bar strike
Finish: White plastic

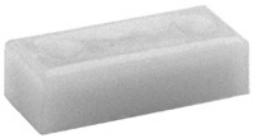

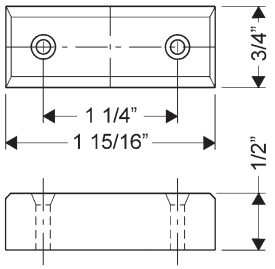

10-057 .65" bar strike
Finish: White plastic

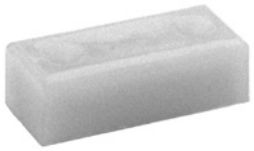

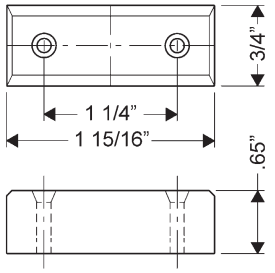

10-058 3/8" bar strike
Finish: White plastic

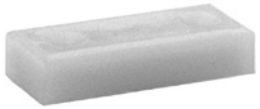

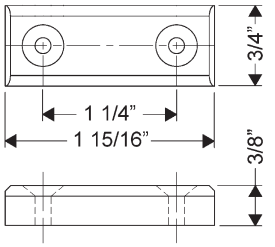

12-1 Angle strike
Finish: 26D, US4 or 10B



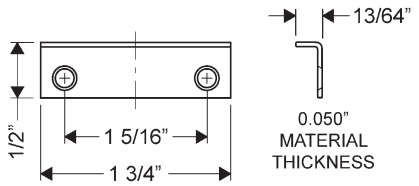

12-3 Medium angle strike
Finish: 26D or US4



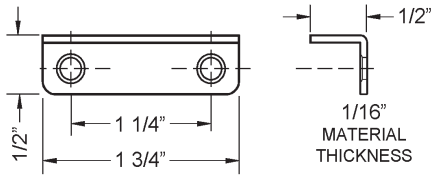

56-1 Bar strike
Finish: 26D, US4 or 10B



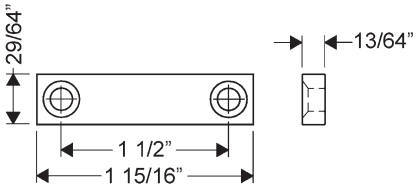

07S Slotted strike
Finish: 26D or US4

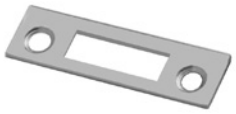

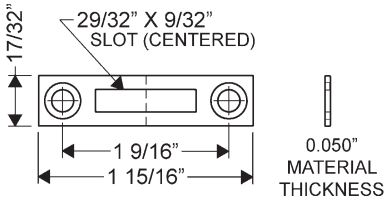

10-056 Notched bar strike
Finish: 26D

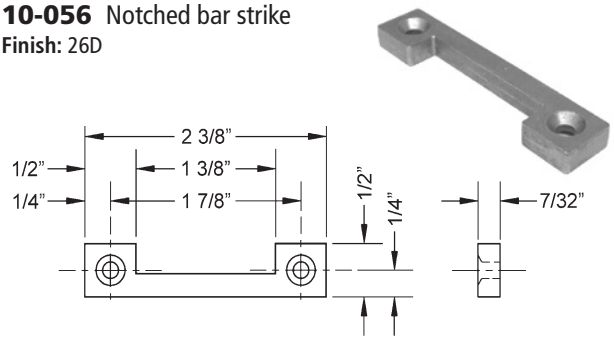

The following warning is applicable to all parts listed on this page:
WARNING: This product can expose you to chemicals including chromium, which is known to the State of California to cause cancer and birth defects or other reproductive harm. for more information go to www.P65Warnings.ca.gov.

12-2 Heavy duty angle strike
Finish 26D



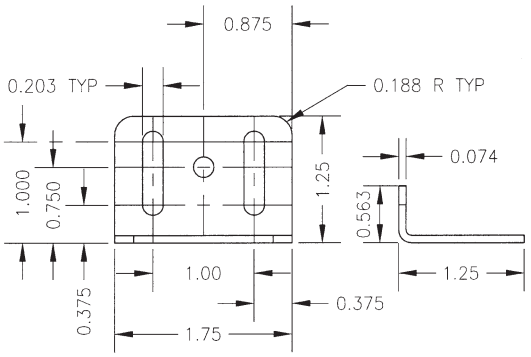

12-4-ZP Frameless drawer strike
Finish Zinc plated



Provides a locking point when there is no frame between drawers. Can be mounted on left or right side of cabinet frame.

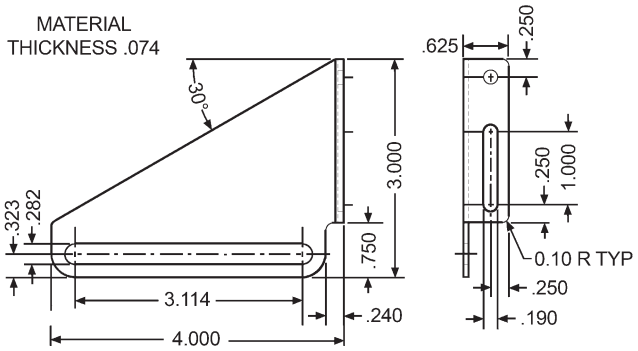

12-5-SS Heavy duty slotted strike
Finish Stainless Steel



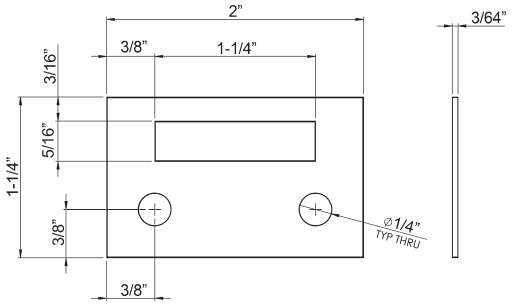

725-SP-MD Slotted strike
Use with 725 mortise deadbolt
Finish US3 or (SS) Stainless Steel



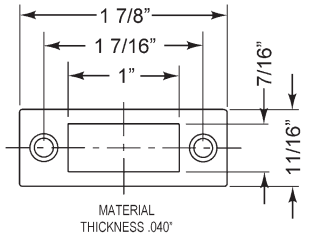

725-SP-RD Solid strike
Use with 725/CR1125 rim deadbolt
Finish US3 or (SS) Stainless Steel



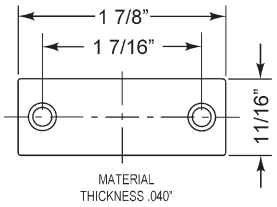

725-SP-ML Slotted lip strike
Use with 725 mortise latch
Finish US3 or (SS) Stainless Steel



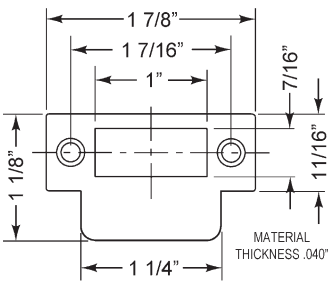

725-SP-RL Solid lip strike
Use with 725/CR1125 rim latch
Finish US3 or (SS) Stainless Steel

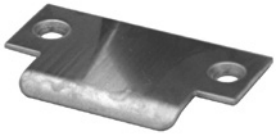

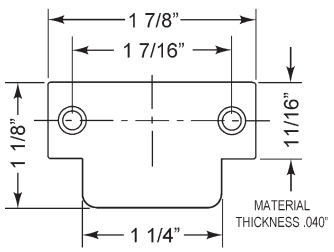

The following warning is applicable to all parts listed on this page:
WARNING: This product can expose you to chemicals including chromium, which is known to the State of California to cause cancer and birth defects or other reproductive harm. for more information go to www.P65Warnings.ca.gov.

Tel: 206.362.3290 | 800.525.0954
Fax 206.362.3569 | www.olympuslock.com

OLYMPUS® LOCK INC

L78ST-1 Lipped strike
Use with: L78, 1-1/8" barrel length and L72V, L92V
Finish: US3 or SS (stainless steel)



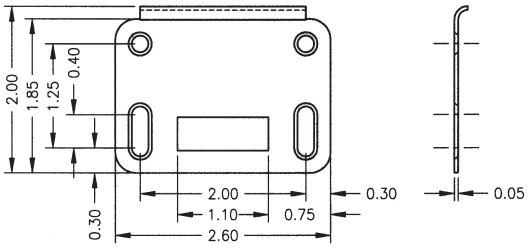

L78ST-2 Lipped strike
Use with: L78, 1-3/8" barrel length
Finish: US3



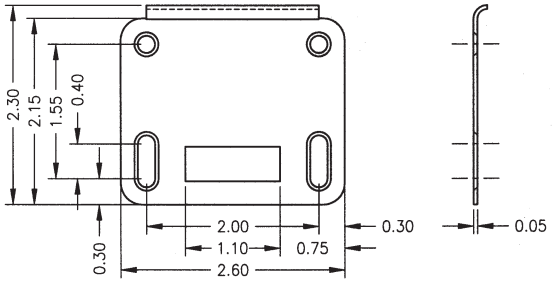

999-STRIKE Lipped strike
Use with: 996, 997, 998, 999, L20V
Finish: US3

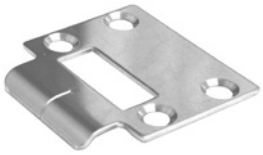

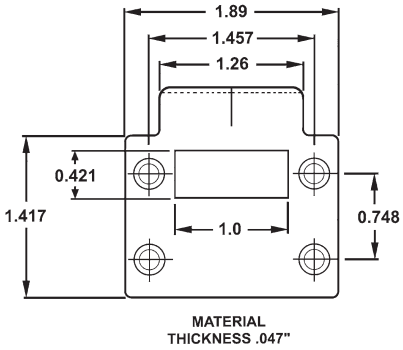

850-210 Lipped strike
Use with: 850/950, 1-1/8" barrel length
Finish: US3



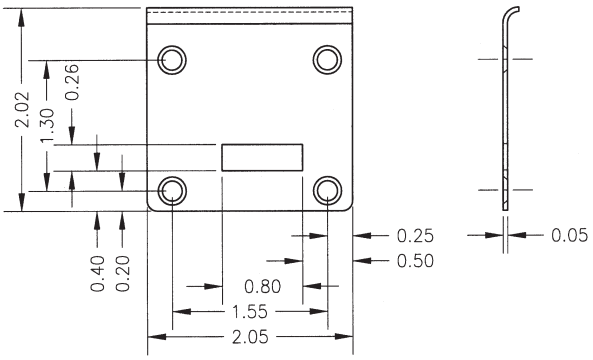

850-211 Lipped strike
Use with: 850, 1-3/8" barrel length
Finish: US3



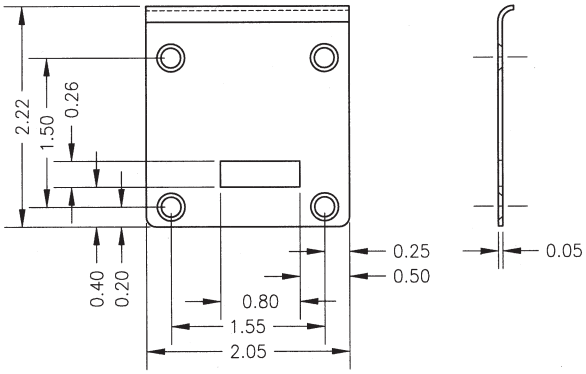

The following warning is applicable to all parts listed on this page:
WARNING: This product can expose you to chemicals including chromium, which is known to the State of California to cause cancer and birth defects or other reproductive harm. for more information go to www.P65Warnings.ca.gov.

100 SERIES — *STRAIGHT CAMS*

For use with 7440/7445 Combi-Cam Ultra



.28" x .22"
Mounting Hole

Width: 3/4"
Thickness: 1/8"

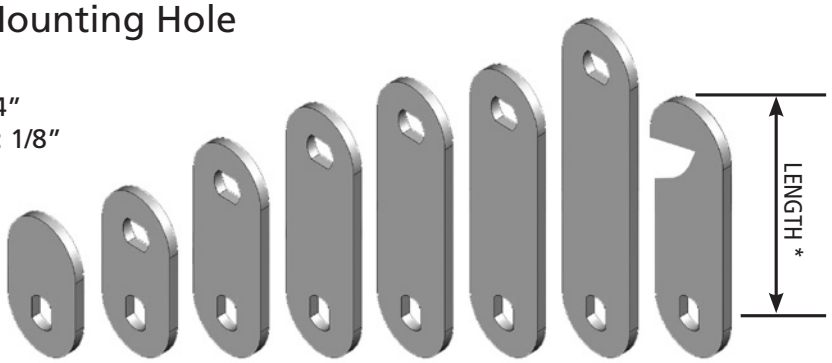

*** LENGTH =** The distance from the center of the mounting hole to the top of the cam.

Cam # 1 2 3 4 5 6 7 8

Cam #	SKU	Length *
1	130049	5/8"
2	130050D	3/4"
3	130031D	1-1/8"
4	130147D	1-1/4"

Cam #	SKU	Length *
5	130023D	1-1/2"
6	130058	1-5/8"
7	130056D**	2"
8	PL32001	1-1/4"

**** 130056D** is available via special order. Requires minimum purchase of 20 pcs.

100 SERIES — *OFFSET CAMS*

For use with 7440/7445 Combi-Cam Ultra



.28" x .22"
Mounting Hole

Width: 3/4"
Thickness: 1/8"

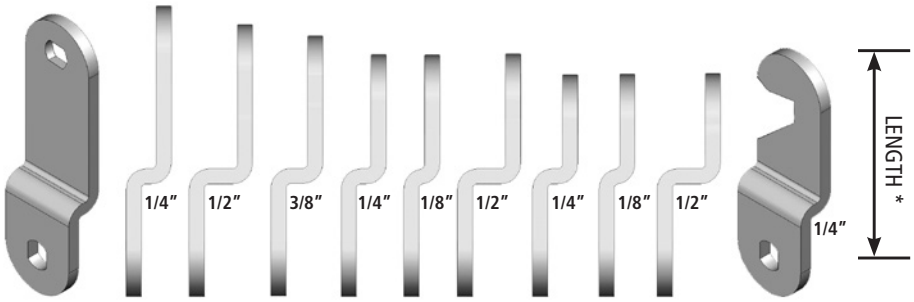

*** LENGTH =** The distance from the center of the mounting hole to the top of the cam.

Cam # 11 12 13 14 15 16 17 18 19 20

Cam #	SKU	Length *	Offset
11	30597D	2-1/4"	1/4"
12	30596D	2"	1/2"
13	30002D	1-5/8"	3/8"
14	30026D	1-1/2"	1/4"
15	30025D**	1-1/2"	1/8"

Cam #	SKU	Length *	Offset
16	30027D**	1-1/2"	1/2"
17	30594D	1-1/4"	1/4"
18	30593D**	1-1/4"	1/8"
19	30595D	1-1/4"	1/2"
20	PL39001	1-1/2"	1/4"

**** 30025D, 30027D, 30593D** are available via special order. Requires minimum purchase of 20 pcs per item.

The following warning is applicable to all parts listed on this page:
WARNING: This product can expose you to chemicals including chromium, which is known to the State of California to cause cancer and birth defects or other reproductive harm. for more information go to www.P65Warnings.ca.gov.

Tel: 206.362.3290 | 800.525.0954
Fax 206.362.3569 | www.olympuslock.com

▶ Offset Cams For B7, DCN, DCR

DCNP-100-BC5.....1/2" offset cam
DCNP-100-LBC.....long offset cam
DCNP-100-HD.....1-7/16" heavy duty offset cam
DCNP-100-HD2.....1-3/4" heavy duty offset cam
DCNP-100-HD3.....1/8" heavy duty offset cam
DCNP-100-HC1.....offset hook cam

SPECIFICATIONS

DCNP cams work with our 3/4" cam lock series DCN, DCR or B7. All offset cams are reversible and can be used in either the inbent or outbent position. See the applicable product page for accessories that ship standard with each product.

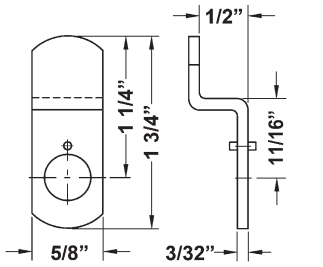

DCNP-100-BC5
1/2" offset cam

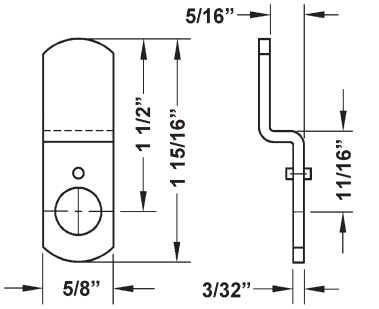

DCNP-100-LBC
15/16" offset cam

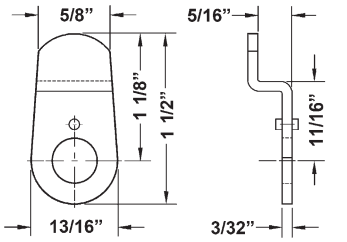

DCNP-100-HD3
1-1/8" heavy duty offset cam

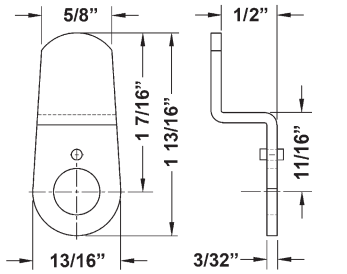

DCNP-100-HD
1-7/16" heavy duty offset cam

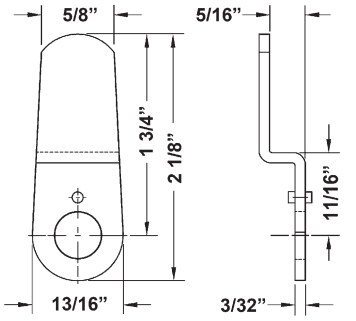

DCNP-100-HD2
1-3/4" heavy duty offset cam

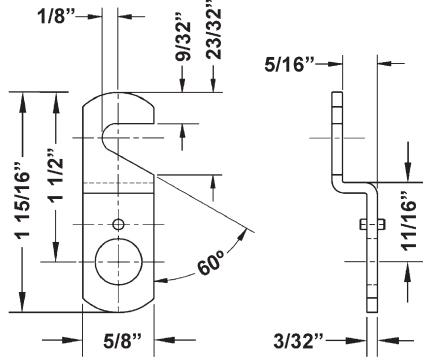

DCNP-100-HC1
offset hook cam

▶ Specialty Cams For B7, DCN, DCR

DCNP-100-B1..... Straight 1-3/32" long with oval cutout
DCNP-100-B2..... U-shaped bent cam
DCNP-100-B3..... Straight hook cam
DCNP-100-WB..... short cam with perpendicular arm

SPECIFICATIONS

DCNP cams work with our 3/4" cam lock series DCN, DCR or B7. All offset cams are reversible and can be used in either the inbent or outbent position. See the applicable product page for accessories that ship standard with each product.

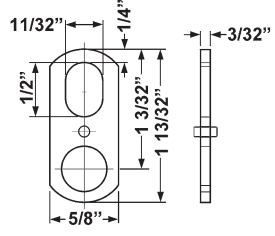

DCNP-100-B1
straight cam w/cutout

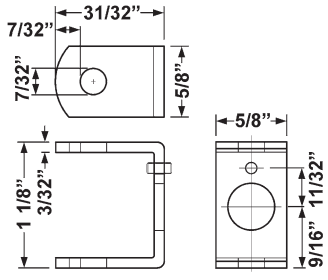

DCNP-100-B2
U-shaped cam

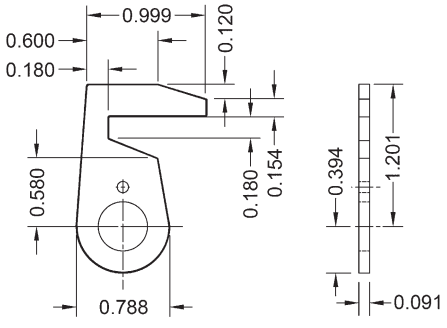

DCNP-100-B3
straight hook cam

The following warning is applicable to all parts listed on this page:
WARNING: This product can expose you to chemicals including chromium, which is known to the State of California to cause cancer and birth defects or other reproductive harm. for more information go to www.P65Warnings.ca.gov.

▶ Straight Cams For B7, DCN, DCR

DCNP-HD-875 ..... 7/8" heavy duty straight cam
DCNP-HD-1 ..... 1" heavy duty straight cam
DCNP-100-SC3 ..... 1-1/2" heavy duty straight cam
DCNP-100-SC2 ..... 1-3/4" heavy duty straight cam
DCNP-100-LC ..... 3" heavy duty straight cam

SPECIFICATIONS

DCNP cams work with our 3/4" cam lock series DCN, DCR or B7. All offset cams are reversible and can be used in either the inbent or outbent position. See the applicable product page for accessories that ship standard with each product.

APPLICATION NOTE
Use the DCNP-HD-875 cam with our DCN2 series cam locks to retrofit **Hollman Lockers** brand keyed cam locks.

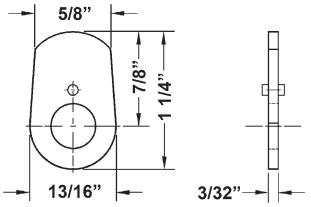

DCNP-HD-875
7/8" heavy duty cam

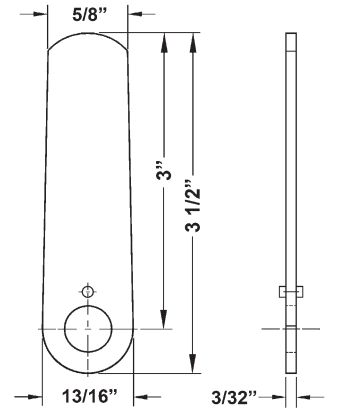

DCNP-100-LC
3" heavy duty straight cam

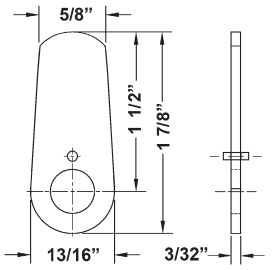

DCNP-100-SC3
1-1/2" heavy duty straight cam

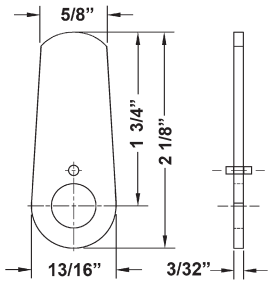

DCNP-100-SC2
1-3/4" heavy duty straight cam

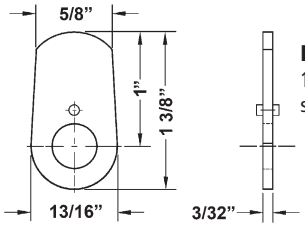

DCNP-HD-1
1" heavy duty straight cam

▶ Other Accessories For B7, DCN, DCR

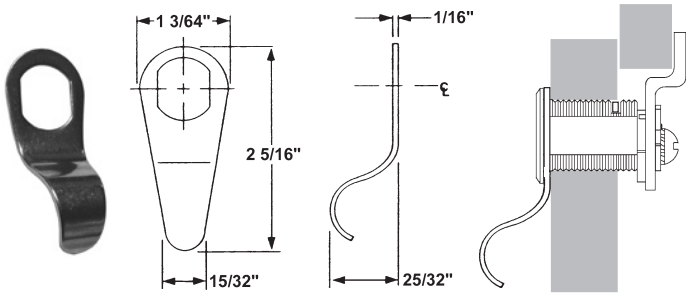

DCNP-300-FP
Finger pull for use with DCN and DCR series cam locks. Eliminates need for additional cabinet pull. Mounts between front of cam lock and cabinet face. Stainless steel finish.

KEY-RETAINING CAM SHIFTERS



DCNP-200-KR
key-retaining drawer cam shifter



DCNP-200-KDR
key-retaining door cam shifter

NUMBER PLATES & KITS

Fit B7, FC10, T37, 953, 954 955 960 961

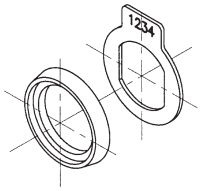

T37-NKIT
Number Plate Kit
For use with B7, FC10 and T37 only

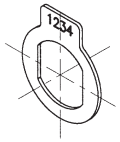

T37DC-NP
Number Plate
For use with DCN, DCR, B7, FC10, T37, 953, 954 955 960 961

WASHERS

for standard 3/4" diameter cam locks



P95-SPW
pronged wood washer with lockdown eyelet. Fits DCN, DCR, B7, 953, 954, 955, 960, 961



DCNP-SPW
pronged wood washer

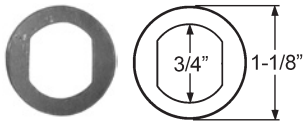

DCNP-GW
self-adhesive clear plastic washer for mounting lock on glass

The following warning is applicable to all parts listed on this page:
WARNING: This product can expose you to chemicals including chromium, which is known to the State of California to cause cancer and birth defects or other reproductive harm. for more information go to www.P65Warnings.ca.gov.

Tel: 206.362.3290 | 800.525.0954
Fax 206.362.3569 | www.olympuslock.com

▶ 720-3 Optional Cams

For use with: 720, 820, 920, CR25, ME93, SA54, and YA93 1-1/8" diameter cam locks ***(excludes 720B-DM)***

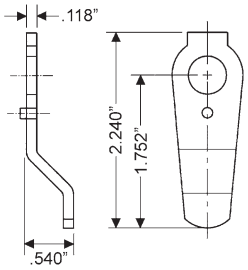

720-3-3
inbent cam for inverted function

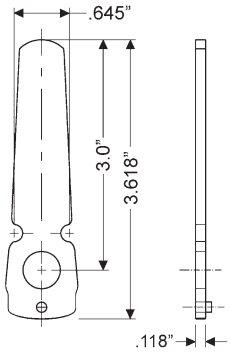

720-3-4
3"straight cam for vertical function (bottom-pin style)

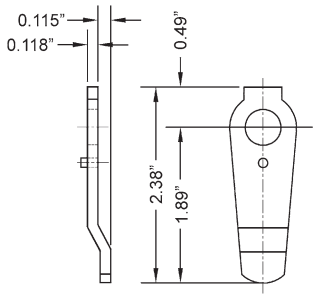

720-3-5
inbent cam for inverted function

▶ SW-1 Switch Accessory Pack

SWITCHES
Switches: Not included.
Accepts: Pin plunger style, snap acting, miniature switches:
- Omron - V Series
- Honeywell (MicroSwitch) - V Series
- Cherry - E Series
- Panasonic (Aromat) - ABV Type
- C&K (ITT) - TM & TF Series



SW-1 Kit

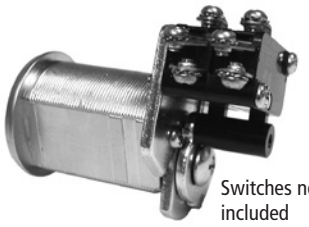

Switches not included

SPECIFICATIONS

Use: Includes parts to convert 720, 820, 920, CR25 ME93, SA54 or YA93 series cam locks into switch locks
Special note: Cannot be used with 720B-DM direct drive
Configuration: Can be configured for 1 or 2 switches
Packaged: Each

▶ TR200 Trim Collars



TR201 - 1/8"



TR202 - 1/4"



TR203 - 3/8"



TR204 - 5/32"

Item	Finish	Description	Use With
TR201	32D or US3	1/8" thick trim collar	720, 820, 920, CR25, ME93, SA54, YA93
TR202	32D or US3	1/4" thick trim collar	
TR203	32D or US3	3/8" thick trim collar	
TR204	32D	5/32" thick trim collar	
TR200A	32D or US3	Trim collar pack. Includes TR201, TR202 and TR203 trim collars.	

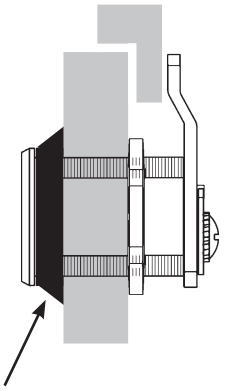

Trim collars pull lock forward allowing it to be used on thinner gauge material thickness.

The following warning is applicable to all parts listed on this page:
WARNING: This product can expose you to chemicals including chromium, which is known to the State of California to cause cancer and birth defects or other reproductive harm. for more information go to www.P65Warnings.ca.gov.

▶ For 1-1/8" Diameter Cam Locks

720, 820, 920, CR25, ME93, SA54, and YA93
(excludes 720B-DM)

NOTE: These instructions do not apply to the 720B-DM direct drive cam lock. The 720B-DM uses different cams and cam shifter mechanism.

Above referenced 1-1/8" diameter cam locks ship standard with A, B and C cam shifters (pictured below).

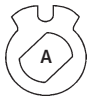

720-CDLM
lost motion cam shifter
(non-key-retaining)



720-CDDM
key retaining
door cam shifter



720-KR
key retaining
drawer cam shifter

820 requires proper installation of universal driver into back of cylinder

(see picture at right) ⟶

The 820 Series includes universal driver (item no. 10-360). For cam rotation to work properly, the supplied universal driver must be installed under the cap at the back of the cylinder in either of the 2 vertical positions indicated at the right (with tab to the left or right only). DO NOT install universal driver in the horizontal (tab up) position.

Schlage compatible cylinder

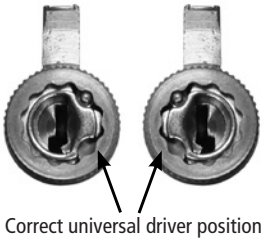

Correct universal driver position for 820 cam lock

The cam shifter and cams must be assembled per the below instructions to achieve the proper handing and operation. To make cam assembly easier, it is recommended that a core is installed into the lock before the cam and cam shifter is assembled onto the back of the lock.

BOX A

720-3-2 VERTICAL CAM / 720-3-4 LONG 3" CAM

IMPORTANT: If your cam has a brass pin between the two notched cut outs, use these instructions, otherwise see Box B.

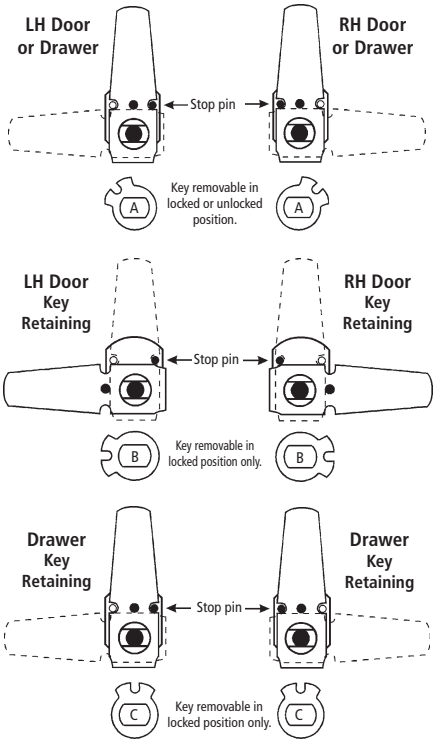

BOX B

720-3-2 VERTICAL CAM / 720-3-4 LONG 3" CAM

IMPORTANT: If your cam has a brass pin on the bottom of the cam, use these instructions, otherwise see Box A.

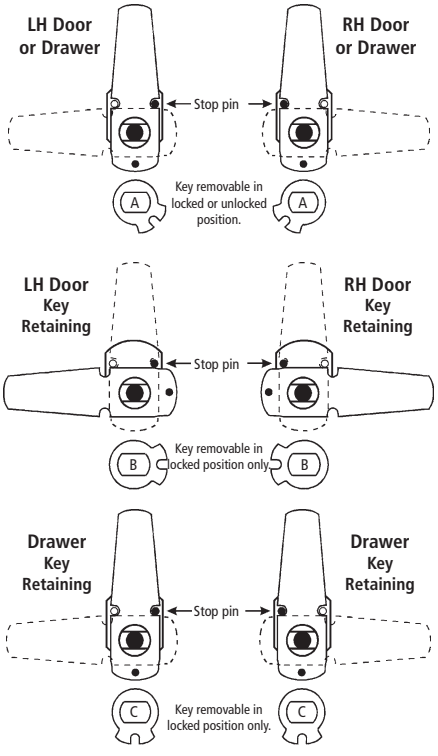

720-3-3 INVERTED CAM / 720-3-5 INVERTED CAM

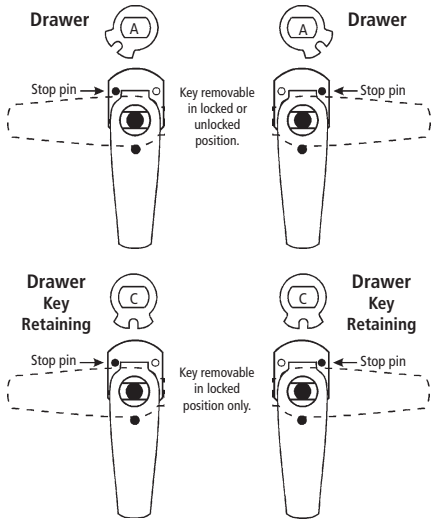

720-3-1 SHORT CAM

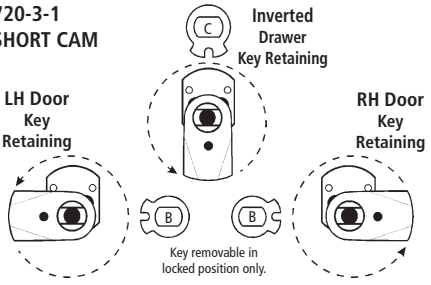

The following warning is applicable to all parts listed on this page:
WARNING: This product can expose you to chemicals including chromium, which is known to the State of California to cause cancer and birth defects or other reproductive harm. for more information go to www.P65Warnings.ca.gov.

Tel: 206.362.3290 | 800.525.0954
Fax 206.362.3569 | www.olympuslock.com

Rekeying Instructions

Rekeying instructions are also available on our website under each individual product page or videos in our video library at **www.olympuslock.com**

▶ 100,200,500,600,996,997,998,999,L20V

1. Remove set screw from barrel of lock.
2. Remove internal cylinder housing from lock body.
3. Remove brass retainer on back of cylinder plug.
4. Turn key 1/4 turn and place follower tool into back of cylinder plug.
5. Push follower through lock, removing plug for rekeying.

▶ 300SD,400SD

Note: *These locks need not be removed from cabinet to be rekeyed.*

1. Open lock (cylinder projects forward).
2. Locate "speed release" button on left side of projected cylinder and depress with sharp tool. Cylinder will spring forward.
3. Turn key 1/4 turn and pull cylinder forward out of lock.
4. Pull up retaining pin located at rear of cylinder. Cylinder may be rekeyed in two ways: use a follow tool to remove plug, or access top slide.
5. After keying, hold bolt stable and reinsert cylinder while depressing "speed release." Lock cylinder will automatically realign itself and snap back into place.

▶ 329R/429R

1. Remove strap from lock.
2. Turn lock over so that the back of the lock faces up and you have access to the set screw.
3. Remove the set screw and the small triangular metal cap.
4. Turn the lock onto its side with the protruding section facing you.
5. Using a sharp tool or paperclip, depress the button at the bottom of the hole. This will release the cylinder housing for removal.
6. Remove the cylinder housing from the lock body.
7. Rekey as necessary.
8. Reassemble lock.

▶ B7,DCN,DCR,FC10

1. Remove cam and screw.
2. Turn lock upside down.
3. Take a sharp tool and push retainer staple out.
4. Turn key 1/4 turn and place follower tool into back of cylinder plug.
5. Push follower through lock removing plug for rekeying.

▶ T37

1. To remove bolt:
   a. Turn key to the 2:00 position, pull bolt up
   b. Using a small tool, depress the bolt spring through the hole on the back of the lock and pull the bolt out
2. Remove the trim collar from the lock.
3. Slide the pin retaining cap off to expose springs and pins.
4. Rekey as necessary.
5. After keying, slide pin retaining cap back into place.
6. Replace trim collar.
7. To reinsert bolt:
   a. Insert key and turn to 2:00 position.
   b. Insert bolt until spring snaps into place.

▶ PN50

1. Visit our website at: www.olympuslock.com for complete rekeying instructions.

▶ N078,R078

1. Remove set screw from barrel of lock.
2. Remove internal cylinder housing from lock body.
3. Remove brass retainer on back of cylinder plug.
4. Turn key 1/4 turn and place follower tool into back of cylinder plug.
5. Push follower through lock, removing plug for rekeying.

▶ 700,800,L78,754,854

1. Remove set screw from barrel of lock.
2. Turn key 1/4 turn and pull out cylinder and housing from lock body.
3. Extract cylinder and rekey same as a Schlage-style cylinder. Olympus brass cylinder body will chamber Schlage and Weiser original cylinders along with Lori replacement plugs. Less cylinder locks may chamber other manufacturer's cylinders.
4. Replace cylinder in housing. For proper operation, lazy cam must be timed.
   Door timing: Driver bar faces away from direction the bolt is projecting.
   Drawer timing: Driver bar faces in same direction the bolt is projecting.
5. Insert cylinder and housing by aligning set screw and hole.
6. Push until cylinder is approximately 1/8" from seated position. Use key to pick up lazy cam which will fully seat cylinder. If key does not withdraw at end of bolt throw, cam is not timed correctly (see "timing" above - Step 4).

▶ 820

1. Remove both set screw and set screw/stop pin from back of lock.
2. Remove rear housing section from back of lock.
3. Remove internal cam driver from back of cylinder.
4. Remove cylinder from lock body.
5. Remove brass retainer on back of cylinder plug.
6. Turn key 1/4 turn and place follower tool into back of cylinder plug.
7. Push follower through lock, removing plug for rekeying.

▶ 829

1. Turn lock over and remove the 4 screws from the bottom rectangular plate.
2. Remove bottom plate, then remove remaining set screw from bottom of lock.
3. Remove cylinder and cylinder top block from lock body.
4. Rekey cylinder, then reassemble into lock body using the reverse of above steps.

▶ 850

1. Remove set screw from barrel of lock.
2. Remove internal cylinder housing from lock body.
3. Turn key 1/4 turn and pull out cylinder and housing from lock body.
4. Extract cylinder and rekey same as a Schlage-style cylinder. Olympus brass cylinder body will chamber Schlage and Weiser original cylinders along with Lori replacement plugs. Less cylinder locks may chamber other manufacturer's Schlage compatible key-in-knob cylinders.
5. Insert cylinder and housing by aligning set screw and hole.

For more information, installation instructions, technical videos or pre-written architectural specifications, please visit our website:

www.olympuslock.com

OLYMPUS® LOCK INC

18424 Highway 99
Lynnwood, WA 98037
Tel: 206.362.3290 / 800.525.0954
Fax: 206.362.3569
info@olympuslock.com
www.olympuslock.com

AR15107

facebook.com/OlympusLock

instagram.com/olympuslock

twitter.com/OlympusLock

youtube.com/OlympusLock

linkedin.com/company/olympus-lock-inc-

enews sign up: olympuslock.com

Copyright © 2025 Olympus® Lock, Inc. all rights reserved. Other products and companies referred to herein are trademarks or registered trademarks of their respective companies or mark holders. Information and specifications in this document are subject to change without notice at any time. The information provided in this document is as complete and correct as is reasonably possible. We cannot guarantee the accuracy of information provided to us by other manufacturers as they are under no obligation to notify us of changes to products or specifications. Printed in USA. 09/25. Literature part-number PC-2501.